SOFAR

USER MANUAL

HYD 5-20KTL-3PH

Shenzhen SOFARSOLAR Co., Ltd.

Shenzhen SOFARSOLAR Co., Ltd.

11/F, Gaoxinqi Technology Building,

District 67, XingDong Community, XinAn Street,

Bao'An District, Shenzhen, China

Email: service@SOFAR.com

Web: www.sofarsolar.com

Document number

Issue 01 |12.03.2026

English

CONTENT

1	**About this manual**	**1**
1.1	Copyright declaration	1
1.2	Presentation of warnings	2
1.3	Presentation of action instructions	3
1.4	Note	3
2	**Basic safety information**	**4**
2.1	Safety information	4
2.2	Symbols and signs	8
3	**Product features**	**11**
3.1	Product information	11
3.2	Product dimensions	12
3.3	Labelling on the device	13
3.4	Functional features	13
3.5	Application modes	14
3.6	Connecting GTX 3000-H batteries (AMASS)	20
3.7	Connecting BTS 5K batteries	21
4	**Installation**	**23**
4.1	Installation information	23
4.2	Installation procedure	24
4.3	Examination before installation	24
4.4	Connections	27
4.5	Tools	28
4.6	Installation Environment Requirements	29
4.7	Installation location	29
4.8	Unpacking the inverter	31
4.9	Installation of the inverter	32
5	**Electrical connections**	**34**
5.1	Safety instructions	34
5.2	Wiring overview	37

5.3	System overview	38
5.4	Electrical connection	46
5.5	Connecting the PE cables	46
5.6	Connecting the DC lines for the PV modules and battery	47
5.7	Connecting the AC power cables	51
5.8	AC connector installation	52
5.9	Communication interfaces	55
5.10	Feed-in limitation function	73
5.11	System monitoring	73
5.12	Installation of the WiFi, or Ethernet stick	74
6	**Commissioning the inverter**	**78**
6.1	Safety test before commissioning	78
6.2	Double Check	78
6.3	Starting the inverter	79
6.4	Initial setup	79
6.5	Smartphone app SOFAR View	84
7	**Operation of the device**	**85**
7.1	Control panel and display field	85
7.2	Standard display	86
7.3	Energy storage modes	87
7.4	Menu structure	93
7.5	Firmware update	102
8	**Troubleshooting handling**	**103**
8.1	Troubleshooting	103
8.2	Error list	105
8.3	Maintenance	119
9	**Technical Data**	**120**

1 About this manual

This Installation and user manual (hereinafter referred to as the manual) describes the installation, electrical connection, commissioning, maintenance and fault elimination procedures of following products:
HYD 5KTL-3PH, HYD 6KTL-3PH, HYD 8KTL-3PH, HYD 10KTL-3PH,
HYD 10KTL-3PH-A, HYD 15KTL-3PH, HYD 20KTL-3PH.

- Carefully read this manual before use and retain it for future reference!
- Treat this manual as an integral component of the device.
- Keep this manual in close proximity to the device, including when it is handed over to another user or moved to a different location.

This manual contains important safety information on installation, operation and maintenance of the device.

- Read and observe all given safety information.

The products, services or features you purchased shall be subject to the company's commercial contracts and terms. All or part of the products and services described in this document may not within the scope of your purchase. Unless additional terms and conditions in your contract, the company does not make any statement or guarantee on the contents of this document.

1.1 Copyright declaration

The copyright of this manual is owned by SOFAR. It may not be copied – neither partially nor completely – by companies or individuals (including software, etc.) and must not be reproduced or distributed in any form, or with the appropriate means.

SOFAR reserves the right to final interpretation. This manual may be amended following feedback from users or customers.

Consult our website at: https://www.SOFAR.com for the latest version.

1.2 Presentation of warnings

This manual contains information on safe operation and uses symbols to ensure the safety of persons and property as well as the efficient operation of the inverter.

- Read through the following symbol explanations carefully in order to prevent injury or property damage.

1.2.1 Warnsymbol

⚠	The general danger symbol warns of risk of serious injury when used with the signal words CAUTION, WARNING, and DANGER.

1.2.2 Signalwords

DANGER	Indicates a hazardous situation which, if not avoided, will result in death or serious injury.
WARNING	Indicates a hazardous situation which, if not avoided, could result in death or serious injury.
CAUTION	Indicates a hazardous situation which, if not avoided, could result in minor or moderate injury.
NOTICE	Indicates a danger that results in damage to or destruction of the inverter.

1.2.3 Sectional warnings

Sectional warnings refer to a complete section and are structured as follows:

⚠ **WARNING**
Type and source of danger **Consequences for non observance** ▸ Avoiding the danger

1.2.4 Embedded warnings

Embedded warnings are part of an action sequence and are placed right before the dangerous step.

WARNING Combination of type/source of danger, consequences for non observance and avoiding the danger.

1.3 Presentation of action instructions

This table shows the sequence of Action steps:

Symbol	Function
✓	This describes an action requirement
1. 2. 3.	This is the sequence of action steps that must be followed step by step
▸	This is a single action step
↳	This describes the result of the action

1.4 Note

Notes are presented in a grey bar.

- Provides tips essential to the optimal operation of the product.

2 Basic safety information

- If you have any questions or problems after reading the following information, please contact SOFAR

This chapter details the safety information pertaining to the installation and operation of the device.

2.1 Safety information

Read and understand the instructions within this manual and familiarise yourself with the relevant safety symbols in this chapter before beginning with the installation of the device and eliminating any faults.

Before connecting to the power grid, you must obtain official authorisation from the local power grid operator in accordance with the corresponding national and state requirements. Furthermore, operation may only be carried out by qualified electricians.

Please contact the nearest authorised service centre if any maintenance or repairs are required. Please contact your dealer to obtain information about your nearest authorised service centre. Do NOT carry out repairs on the device yourself; this may lead to injury or property damage.

Before installing the device or carrying out maintenance on it, you must open the DC switch in order to interrupt the DC voltage of the PV generator. You can also switch off the DC voltage by opening the DC switch in the generation junction box. Not doing this may result in serious injury.

2.1.1 Qualified personnel

Personnel tasked with the operation and maintenance of the device must have the qualifications, competence and experience required to perform the described tasks, while also being capable of fully understanding all instructions contained within the manual. For safety reasons, this inverter may only be installed by a qualified electrician who:

- -has received training on occupational safety, as well as the installation and commissioning of electrical systems
- -is familiar with the local laws, standards and regulations of the grid operator.

SOFAR assumes no responsibility for the destruction of property or any injuries to personnel caused by improper usage.

2.1.2 Installation requirements

Please install the inverter according to the information contained in the following section. Mount the inverter to a suitable object with a sufficient load-bearing capacity (e.g. walls, PV frames etc.) and ensure that the inverter is upright. Choose a suitable place for the installation of electrical devices. Ensure that there is sufficient space for an emergency exit which is suitable for maintenance. Ensure sufficient ventilation in order to guarantee an air circulation for the cooling of the inverter.

2.1.3 Transport requirements

The factory packaging is specifically designed to prevent transport damage, i.e. violent shocks, moisture and vibrations. However, the device must not be installed if it is visibly damaged. In this case, notify the responsible transport company immediately.

2.1.4 Storage requirements

If the equipment is no longer to be put into service or is to be stored for a long period, make sure that the packaging is intact. Store the equipment in a well-ventilated indoor area that will not cause damage to the equipment components.

Store in a clean and dry place, away from dust and moisture. Do not subject to rain or ground water erosion.

Do not tilt or invert the box. When stacking, place the inverter carefully to avoid personal injury or equipment damage caused by tipping the equipment. The maximum number of stacking layers must not exceed 4 layers.

Keep the storage temperature around -40℃-70℃. Relative humidity 5.95% no condensation.

When restarting equipment that has been out of service for a long period of time, the equipment shall be thoroughly inspected.

2.1.5 Labelling on the device

The labels must NOT be concealed by items and foreign objects (rags, boxes, devices, etc.); they must be regularly cleaned and kept clearly visible at all times.

2.1.6 Electrical connection

Observe all applicable electrical regulations when working with the Solar inverter.

⚠ DANGER

Dangerous DC voltage

- Before establishing the electrical connection, cover the PV modules using opaque material or disconnect the PV generator from the inverter. Solar radiation will cause dangerous voltage to be generated by the PV generator!

⚠ DANGER

Danger through electric shock!

- All installations and electrical connections may only be carried out by trained electricians!

NOTICE

Authorisation for grid feed-in

- Obtain authorisation from the local power grid operator before connecting the inverter to the public power grid.

- Do not open the inverter or remove any of the labels. Otherwise, SOFAR shall assume no guarantee.

2.1.7 Operation

⚠ DANGER

Electric shock

- Contact with the electrical grid or the device's terminals may result in an electric shock or fire!
- Do not touch the terminal or the conductor which is connected to the electrical grid.
- Follow all instructions and observe all safety documents that refer to the grid connection.

⚠ CAUTION

Burning due to hot housing

- While the inverter is being operated, several internal components will become very hot.
- Please wear protective gloves!
- Keep children away from the device!

2.1.8 Repair and maintenance

⚠ DANGER

Dangerous voltage!

- Before carrying out any repair work, first switch off the AC circuit breaker between the inverter and power grid, and then the DC switch.
- After switching off the AC circuit breaker and the DC switch, wait a minimum of 5 minutes before starting any maintenance or repair work.

NOTICE

Unauthorised repairs!

- Following the elimination of any faults, the inverter should be fully functional once more. Should any repairs be required, please contact a local authorised service centre.
- The internal components of the inverter must NOT be opened without the relevant authorisation. Shenzhen SOFAR Co., Ltd. assumes no responsibility for any resulting losses or defects.

2.1.9 End-of-life requirements

When the inverter or any related components need to be disposed of, please ensure that the disposal is carried out in accordance with local waste handling regulations.

Make sure to send the inverter to an appropriate disposal site in accordance with local regulations.

2.2 Symbols and signs

⚠ CAUTION

Beware of burning hazards due to the hot housing!

- While the inverter is in operation, only touch the display and the buttons, as the housing can become hot.

NOTICE

Implement earthing!

- The PV generator must be earthed in accordance with the requirements of the local power grid operator!
- For reasons of personal safety, we recommend that all PV module frames and inverters of the PV system are reliably earthed.

⚠ WARNING

Damage due to overvoltage

- Ensure that the input voltage does not exceed the maximum permissible voltage. Overvoltage may cause long-term damage to the inverter, as well as other damage that is not covered by the warranty!

2.2.1 Symbols on the inverter

Several symbols pertaining to safety can be found on the inverter. Please read and understand the content of these symbols before starting the installation.

Symbol	Description
	Residual voltage is present in the inverter! Before opening the inverter, you should wait five minutes to ensure that the capacitor has been fully discharged.
	Caution! Danger through electric shock
	Caution! Hot surface
	The product is compliant with EU guidelines
	Earthing point
	Please read the manual before installing the inverter
IP	Device degree of protection according to EN 60529
+ −	Positive and negative poles of the DC input voltage
	The inverter must always be transported and stored with the arrows pointing upward
	RCM (Regulatory Compliance Mark) The product meets the requirements of the applicable Australian standards.

3 Product features

This chapter describes the product features, dimensions and efficiency levels.

3.1 Product information

The HYD 5K-20KTL-3PH is a grid-coupled PV and energy storing inverter which can also supply energy in stand-alone operation. The HYD 5K-20KTL-3PH has integrated energy management functions which cover a wide range of application scenarios.

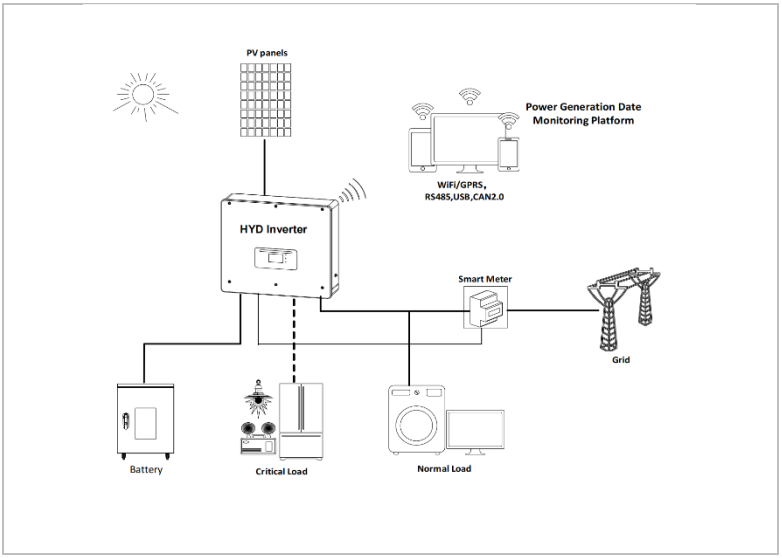

Figure 3-1 HYD 5K-20KTL-3PH inverter system diagram

HYD 5K-20KTL-3PH inverters may only be used with photovoltaic modules which do not require one of the poles to be earthed. In normal operation, the operating current must not exceed the limits specified within the technical data.

The selection of the optional inverter parts must be determined by a qualified technician who has good knowledge of the installation conditions.

3.2 Product dimensions

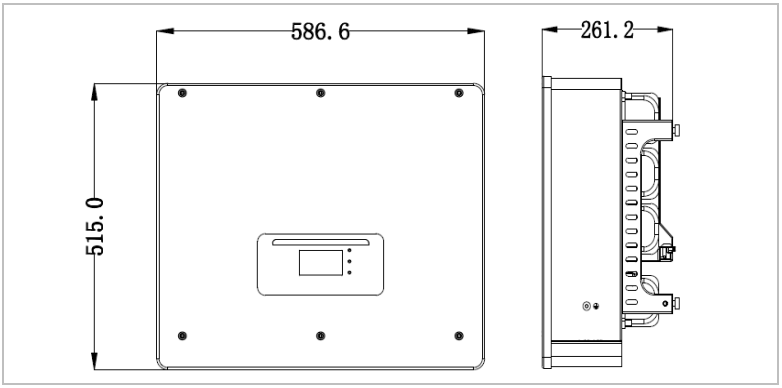

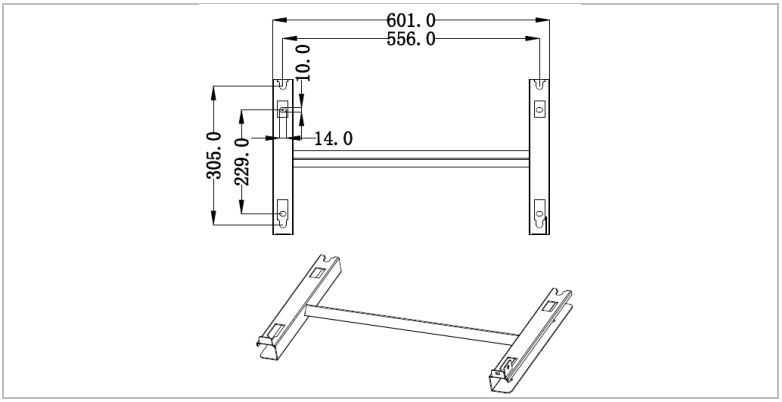

Figure 3-2 Dimensions

3.3 Labelling on the device

Labelling must not be covered or removed!

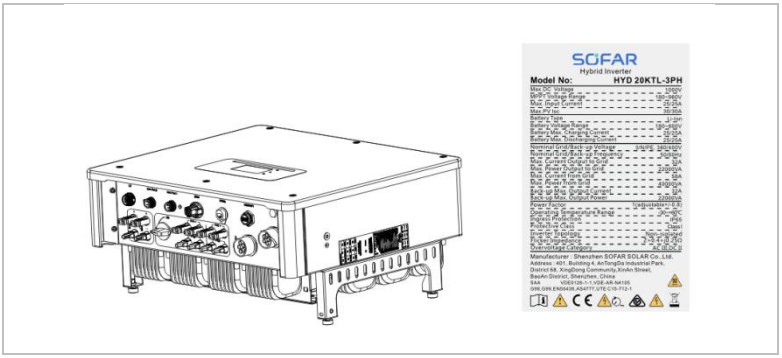

Figure 3-3 HYD 5K-20KTL-3PH appearance and label

3.4 Functional features

The DC output generated by the PV generator can be used for both grid feed-in and battery charging.

The battery can supply the energy to the grid or the consumer. The emergency current supply mode (EPS) can provide inductive loads such as air conditioning systems or refrigerators with an automatic switchover time of less than 10 milliseconds, and a temporary overload of up to 10% is possible.

3.4.1 Functions

- Two MPP trackers with 1.5-fold DC overload.
- Flexible switching between on-grid operation and energy storage operation.
- Maximum efficiency when charging and discharging the battery (97.8%).
- Up to 2 battery strings with a combined maximum charging and discharging current of 50 A.
- Wide battery input voltage range (180–800 V).
- The EPS output can be connected to unbalanced loads.
- Up to 6 inverters can operate in parallel at the EPS connection and AC connection.

- Monitoring via RS485 and WiFi, optionally via Bluetooth.

3.4.2 Electrical block diagram

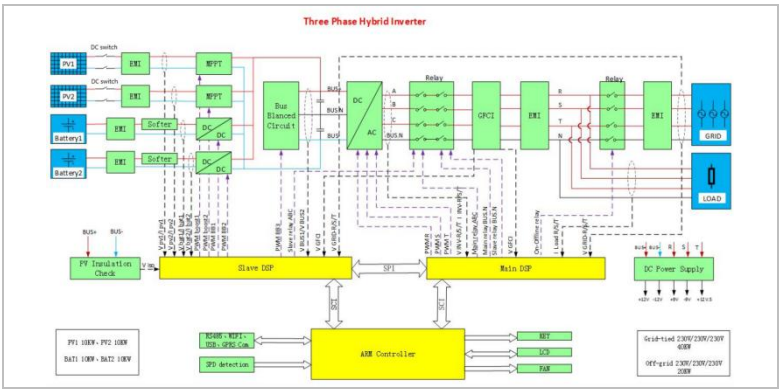

Figure 3-4 Electrical schematic diagram

3.5 Application modes

3.5.1 Typical energy storage system

A typical energy storage system with PV panels and battery unit(s), connected to the grid.

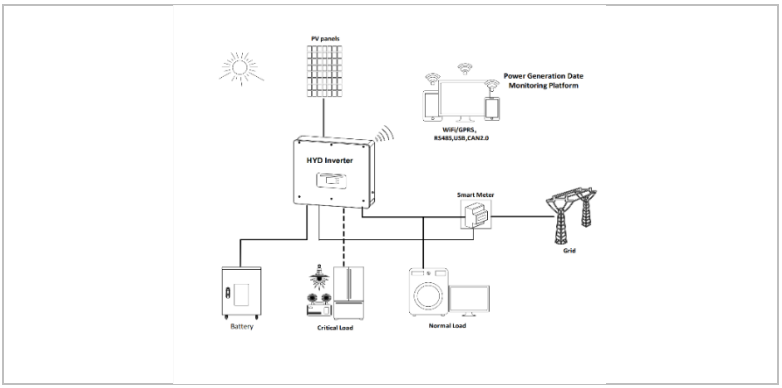

Figure 3-5 Typical energy storage system

3.5.2 System without PV connection

In this configuration, there are no PV panels connected and the battery is charged through the grid connection.

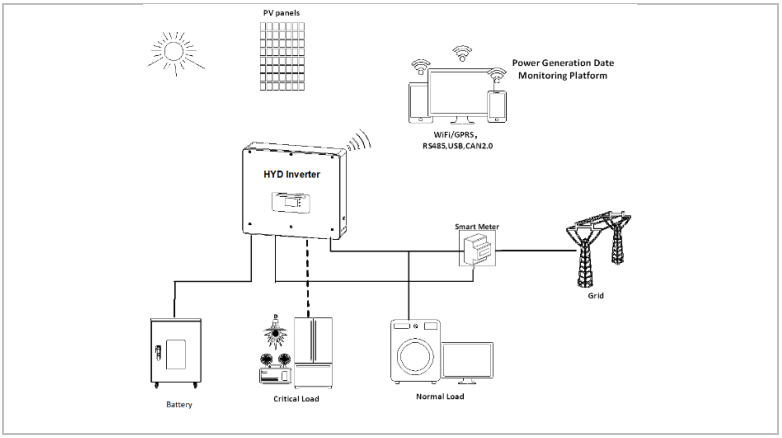

Figure 3-6 System without PV connection

3.5.3 System without battery

In this configuration, the battery unit(s) can be added later.

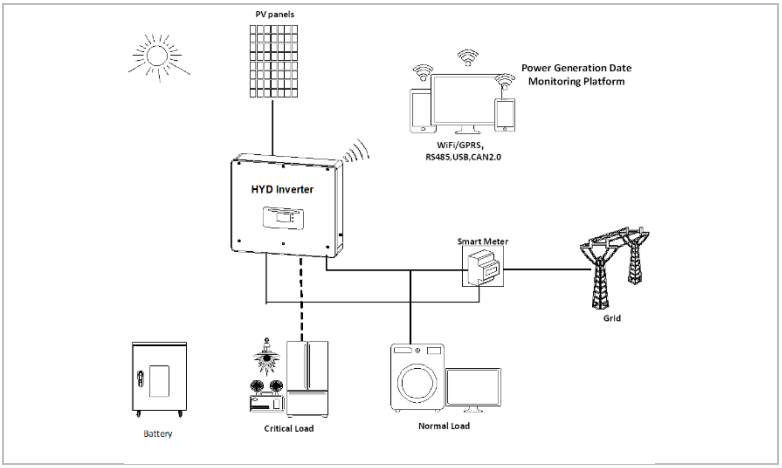

Figure 3-7 System without battery

3.5.4 Back-up mode (off-grid)

When there is no grid connection, the PV panels and the battery will provide electricity to the critical load.

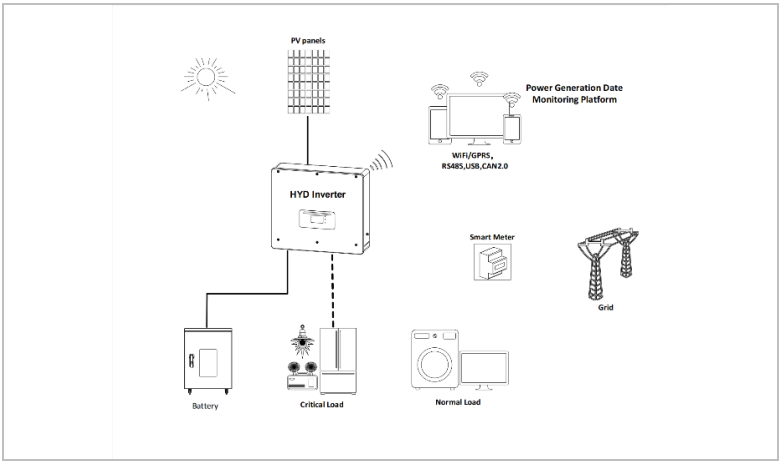

Figure 3-8 Back-up mode (Off- Grid)

3.5.5 System with multiple inverters (5–20 kW)

Up to 6 inverters can be connected in parallel, to the grid and EPS connections, resulting in an EPS output of up to 200 kVA.

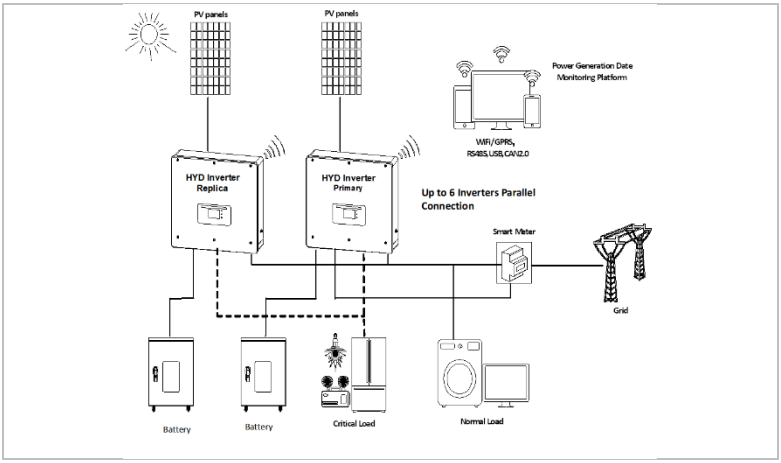

Figure 3-9 System with multiple inverter

- Multiple inverters connected in parallel shall be of the same power model with the same power and battery configuration.
- The energy meter or CTs are connected to the Master inverter. Control of all inverters takes place via the link cable.
- For the parallel switching of several devices, it is recommended to use a joint AC load break switch for the connected loads at the LOAD connection.
- For the parallel switching of several devices, it is recommended to use a joint AC load break switch for the connected loads at the GRID connection.
- In order to evenly distribute the loads among the inverters, the cable length between each output and the load must be the same.
- If the maximum apparent power of a load is greater than 110% of the inverter' s rated output, the device must not be connected via the AC LOAD terminal, but rather directly to the grid.

3.5.6 AC retrofit system

In this system configuration, the hybrid system for an already existing PV system is supplemented with a solar inverter of any brand. By installing a second smart meter, the PV production can be taken into account and used for charging the battery.

- The communication address of meter 1 should be set to 1. Similarly, the communication address of meter 2 should be set to 2.

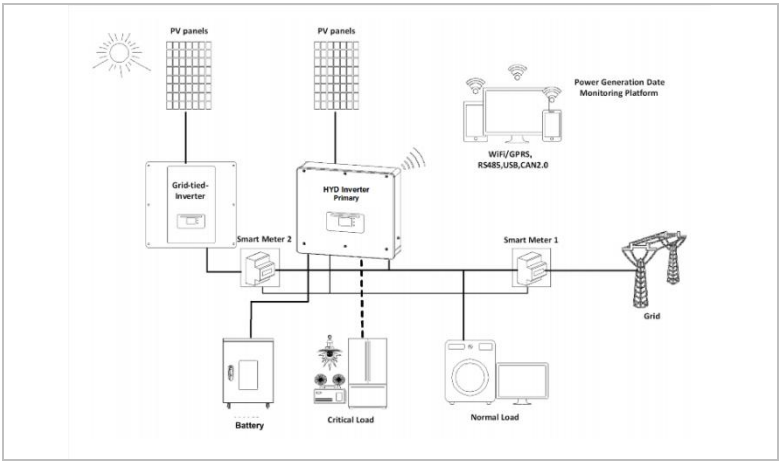

Figure 3-10 AC retrofit system

3.5.7 Unbalanced load

By enabling the "Unbalanced load" option, the inverter compensates unbalanced loads either in EPS mode or on-grid mode.

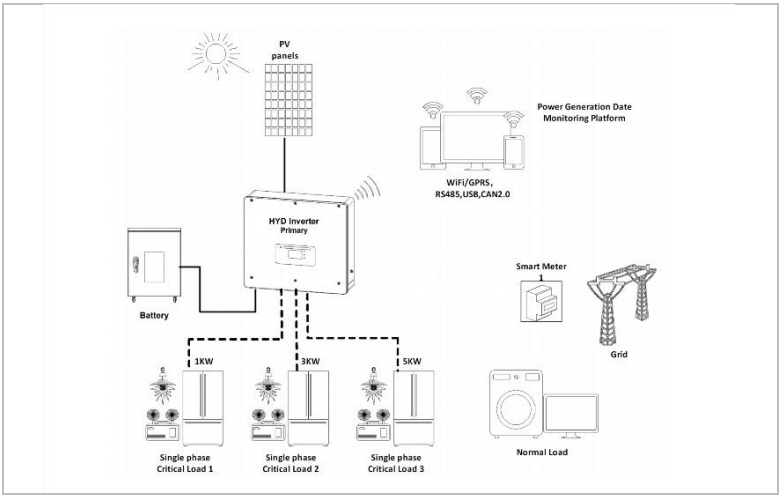

Figure 3-11 Unbalanced load (EPS mode)

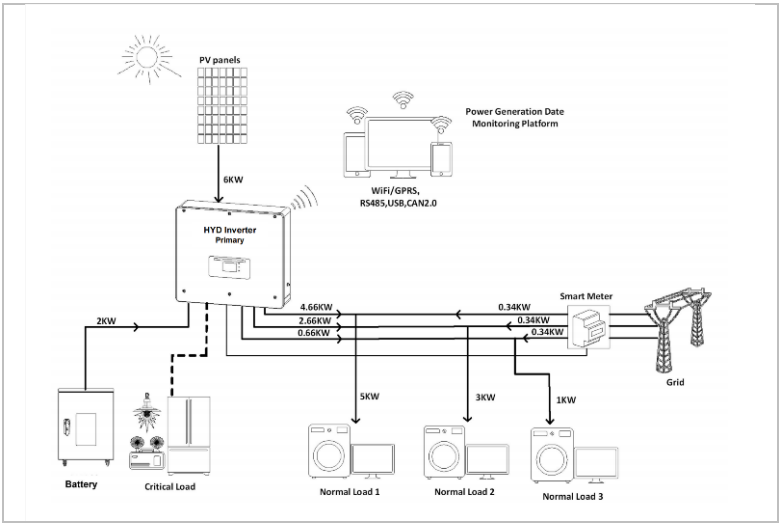

Figure 3-12 Unbalanced load (On Grid)

3.6 Connecting GTX 3000-H batteries (AMASS)

Using SOFAR's own battery system GTX 3000-H is a way to build scalable battery systems. A GTX 3000H battery module has a nominal capacity of 2,5 kWh, allowing multiple configurations for one tower from 10 kWh (GTX 3000-H4) to 25 kWh (GTX 3000-H10), The series battery is rated at 25A and the individual battery is rated at 51.2V.

The HYD 5 ... 8KTL-3PH models have one battery input (max. current 25 A), and the HYD 10 ... 20KTL-3PH models have two battery inputs (max. current 25 A / 25 A).

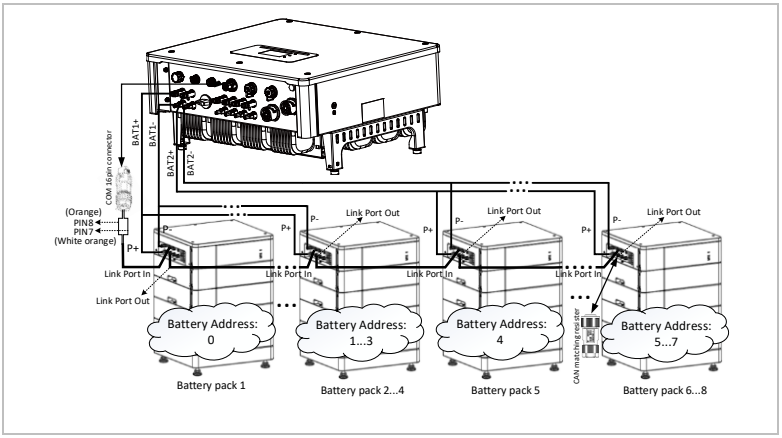

Figure 3-13 GTX 3000-H connecting in 4 Towers in Parallel

- If a battery input is unused, ensure to set this in the inverter's system settings, for example:
- System Settings – Input Channel Config – Bat Channel2 – Not Used.
- Configuration of the battery setup should only be done when the inverter is in standby mode!
- Advanced Settings – 10. Switch on / off – Switch Off
- The battery inputs of different inverters should not be connected in parallel
- Each battery tower corresponds to a unique battery address. Each battery address can be configured from 00–15 or not used

- The other battery parameters should be set according to the battery specifications

3.7 Connecting BTS 5K batteries

Using SOFAR's own battery module BTS 5K is a way to build scalable battery systems. A BTS E5-DS5 battery system has a nominal capacity of 5.12 kWh, allowing multiple configurations for one tower from 5.12 kWh (BTS E5-DS5) to 20.48 kWh (BTS E20-DS5). The parallel battery are rated at 400V and the individual battery are rated at 7A.

The HYD 5 ... 8KTL-3PH models have one battery input (max. current 25 A), and the HYD 10 ... 20KTL-3PH models have two battery inputs (max. current 25 A / 25 A).

Below diagram is an example of how to connect the BTS battery system to SOFAR's HYD 5 ... 20KTL-3PH.

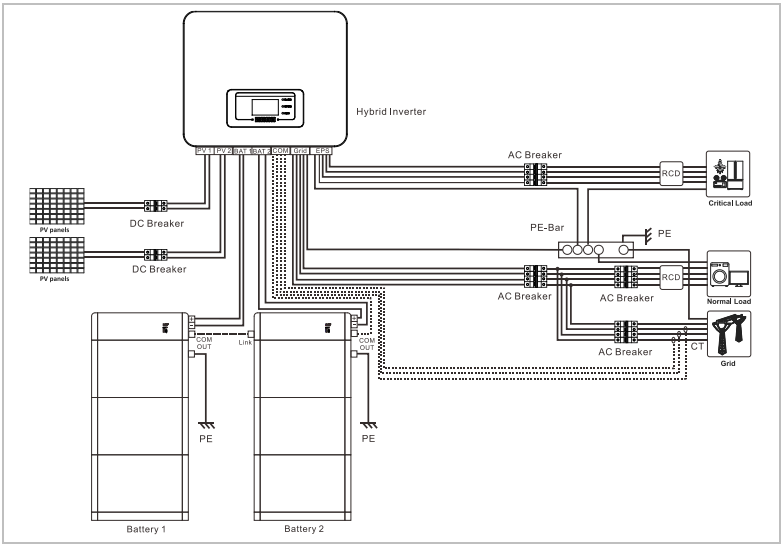

Figure 3-14 System with BTS 5K battery

Below is the schematic connection diagram of a system where the neutral line and ground line are connected together.

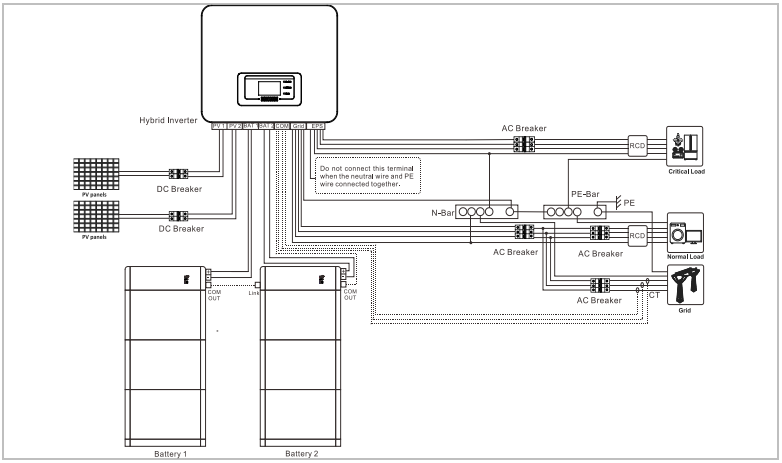

Figure 3-15 System with BTS 5K battery in Australian N-Grid with N-EPS connected

- Configuration of the battery setup should only be done when the inverter is in standby mode!
- Advanced Settings – 10. Switch on / off – Switch Off
- If a battery input is unused, ensure to set this in the inverter's system settings, for example:
- System Settings – Input Channel Config – Bat Channel2 – Not Used.
- The battery inputs of different inverters should not be connected in parallel
- Each battery tower corresponds to a unique battery address. “Auto Config. Address” will detect the number and addresses of the connected batteries automatically within 2-3 Minutes.
- In certain regions there are specific local safety requirements of the power grid. Ensure to comply with all local safety requirements.
- According to the Australian safety regulations, the neutral cables on the grid-connected side and EPS side must be connected together. Otherwise the EPS cannot be used.

4 Installation

4.1 Installation information

DANGER

Fire hazard

- Do NOT install the inverter on flammable material.
- Do NOT install the inverter in an area in which flammable or explosive material is stored.

CAUTION

Burning hazard

- Do NOT install the inverter in places where it can be accidentally touched. The housing and heat sink may become very hot while the inverter is being operated.

NOTICE

Weight of the device

- Take into account the weight of the inverter when transporting and moving it.
- Choose a suitable installation location and surface.
- Commission a minimum of two persons for the installation of the inverter.
- Do not set down the inverter overhead.

4.2 Installation procedure

Mechanical installation is performed as follows:

1. Examine the inverter before installation
2. Prepare the installation
3. Select an installation location
4. Transport the inverter
5. Mount the rear panel
6. Install the inverter

4.3 Examination before installation

4.3.1 Checking the external packaging materials

Packaging materials and components may become damaged during transportation. Therefore, the external packaging materials must be examined before the inverter is installed. Check the external packaging material for damage, e.g. holes and cracks. If you discover any damage, do not unpack the inverter and contact the transport company and/or dealer immediately. It is recommended that the packaging material should be removed within 24 hours before installing the inverter.

4.3.2 Checking the delivery scope

After unpacking the inverter, check that the delivery items are both intact and complete. In the event of any damage or missing components, contact the wholesaler.

No.	Image	Description	Quantity	
			5...8kW	10...20kW
01		Inverter HYD 5K ... 20KTL-3PH	1	
02		Wall bracket	1	

No.	Image	Description	Quantity	
			5...8kW	10...20kW
03		PV+ input terminal	2	4
04		PV- input terminal	2	4
05		MC4 connector contact PV+	2	4
06		MC4 connector contact PV-	2	4
07		BAT- input connector	1	2
08		BAT+ input connector	1	2
09		BAT- connector contact	1	2
10		BAT+ connector contact	1	2
11		M6 hexagon screw	2	
12		M8*80 expansion screws (wall bracket)	4	
13		AC grid connection	1	
14		AC load connection	1	
15		Link port connection	1	

No.	Image	Description	Quantity	
			5...8kW	10...20kW
16		8-pole terminal Terminal resistance for parallel system	1	
17		DRMs connection	1	
18		6-pole connector for CT	1	
19		Three-phase smart meter	1	
20	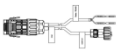	COM communication cable	1	
21		USB acquisition stick (WIFI)	1	
22		Temperature sensor NTC (5m) when using Lead-acid battery	1	
23		Manual	1	
24		Warranty card	1	
25		Quality certificate	1	
26		Test report, output test	1	
27		Connector accessories	2	

4.4 Connections

⚠ CAUTION

Damage during transportation

- Please check the product packaging and connections carefully prior to installation.

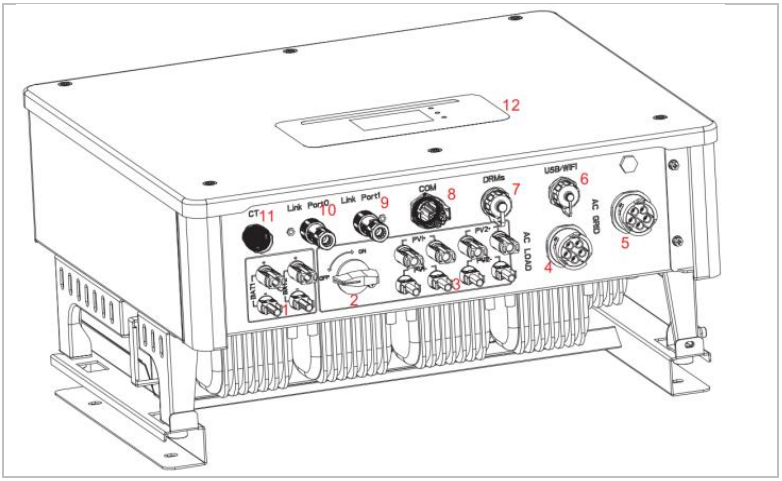

Figure 4-1 HYD 5K-20KTL-3PH inverter overview

①	Battery connection	②	DC switch
③	PV input terminals	④	AC load connection
⑤	AC grid connection	⑥	USB/WiFi
⑦	DRMs	⑧	Communication connection
⑨	Link port 1	⑩	Link port 0
⑪	Current sensor connection (CT)	⑫	LCD display

- The number of Battery input terminals depends on the Rated Power:

  HYD 5K...8KTL-3PH 2pcs

  HYD 10K...20KTL-3PH 4pcs

- The number of PV input terminals depends on the Rated Power:

  HYD 5K...8KTL-3PH 4pcs

  HYD 10K...20KTL-3PH 8pcs

4.5 Tools

Prepare the tools required for the installation and the electrical connection.

No.	Tool	Model	Function
01		Hammer drill Recommended drill diameter: 8mm	Used to drill holes in the wall.
02		Screwdriver	Wiring
03		Phillips screwdriver	Used to remove and install the screws of the AC terminal
04		Removal tool	Used to remove the PV , battery terminal
05		Wire stripper	Used to strip the wire
06		6mm Allen key	Used to turn the screw to connect the rear panel to the inverter
07		Crimping tool	Used to crimp power cables
08		Multimeter	Used to check the earthing
09		Marker	Used for marking
10	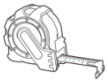	Measuring tape	Used to measure distances

11	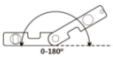	Spirit level	Used to align the wall bracket
12		ESD gloves	for the installer
13		Safety goggles	for the installer
14		Anti-dust respiratory mask	for the installer

4.6 Installation Environment Requirements

- Choose a dry, clean, and tidy place, convenient for installation.
- Ambient temperature range: -30–60°C.
- Relative humidity: 0–100% (non-condensed).
- The inverter shall be installed in a well-ventilated place.
- Do not place the inverter close to flammable or explosive materials.
- The AC overvoltage category of the inverter is category II.
- Maximum altitude: 4000m
- Pollution degree: 4

4.7 Installation location

Choose a suitable position for the installation of the inverter. Ensure that the following requirements have been fulfilled:

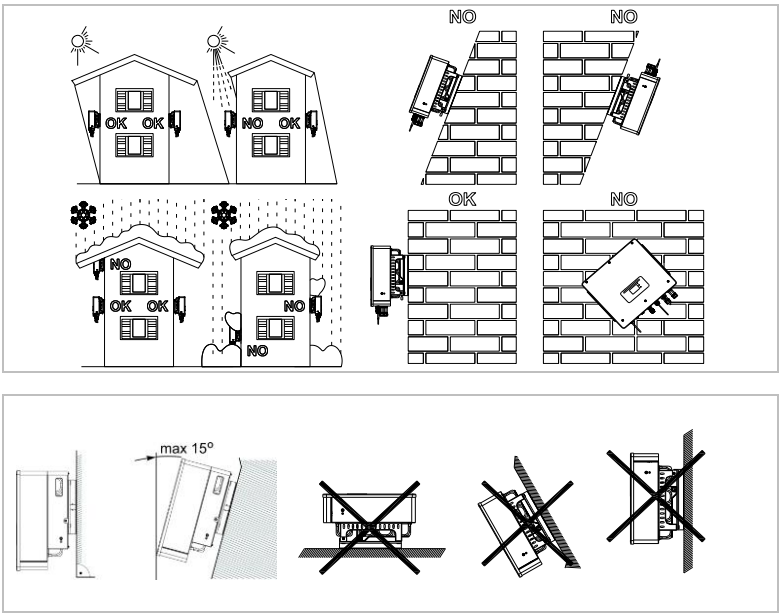

Figure 4-2 Installation Position of HYD 5-20KTL-3PH

Minimum distances for individual HYD 5-20KTL-3PH inverters:

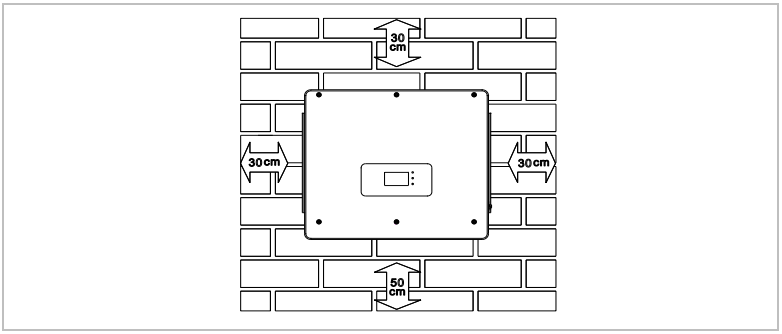

Figure 4-3 Minimum distances for individual inverter

Minimum distances for several HYD 5K-20KTL-3PH inverters:

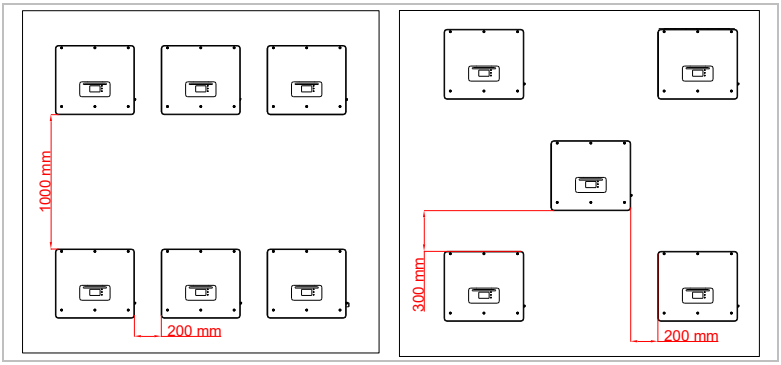

Figure 4-4 Minimum distances for several inverter

4.8 Unpacking the inverter

1. Open the packaging and grip underneath the inverter at the sides with both hands.

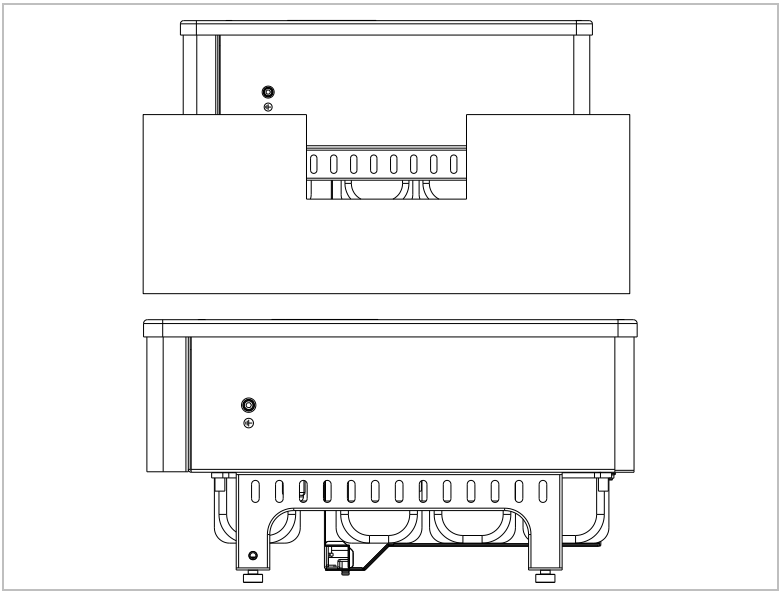

Figure 4-5 Moving the inverter

2. Lift the inverter out of the packaging and move it to its installation position.

NOTICE

Mechanical damage

- In order to prevent injuries and damage to the device, ensure that the inverter is kept balanced while it is being moved - it is very heavy.
- Do not place the inverter on its connections, as these are not designed to bear its weight. Place the inverter horizontally on the ground.
- When you place the inverter on the ground, place foamed material or paper underneath it in order to protect its housing.

4.9 Installation of the inverter

1. Hold the wall bracket in the desired place and mark the four holes. Put the wall bracket aside and drill the holes.
2. Guide the spread screw M8*80 into the hole vertically and ensure that its insertion depth is sufficient.
3. Align the wall bracket with the hole positions and fasten by tightening the spread screw with the nuts.

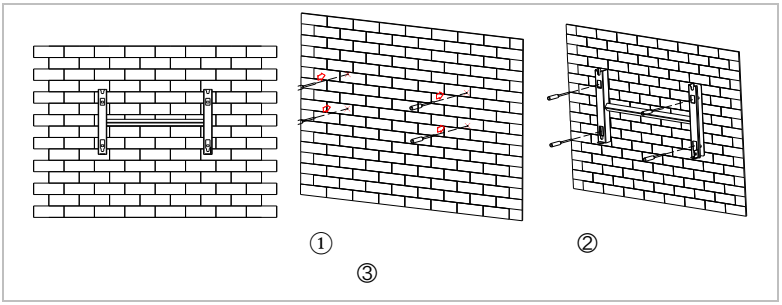

Figure 4-6 Installing HYD 5-20KTL-3PH(a)

4. Place the inverter in the wall bracket and fasten it with the M6 hexagon screw.
5. You can secure the inverter to the wall bracket using a lock.

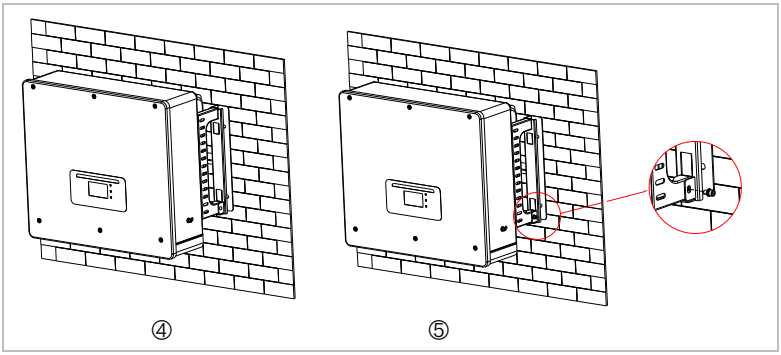

Figure 4-7 Installing HYD 5-20KTL-3PH(b)

5 Electrical connections

5.1 Safety instructions

This topic describes the electrical connections of the inverter HYD 5- 20KTL-3PH. Read this section thoroughly and carefully before connecting the cables.

⚠ DANGER

Electrical voltage at the DC connections

- Ensure that the DC switch is OFF before establishing the electrical connection. The reason is that the electrical charge remains in the capacitor after the DC switch has been switched off. Therefore, at least 5 minutes must lapse before the capacitor has been electrically discharged.

⚠ DANGER

Electrical voltage

- PV modules generate electrical energy when exposed to sunlight, and this may present an electrical shock hazard. Therefore, cover the PV modules with an opaque sheet before connecting to the DC input power cable.

⚠ DANGER

Electrical voltage at the DC connections

- Wear rubber gloves and protective clothing (safety goggles and boots) when working on high voltage/high current systems such as inverter and battery systems.

NOTICE

Qualification

- The installation and maintenance of the inverter must be carried out by an electrician.

- The open-circuit voltage of the modules connected in series must be lower than or equal to 1000 V.

The connected PV modules must be compliant with IEC 61730 class A.

Table 5-1 Relevant current parameters of each model

Model	Isc PV (absolute maximum)	Maximum output overvoltage protection
HYD 5KTL-3PH	15 A/15 A	8 A*3
HYD 6KTL-3PH		10 A*3
HYD 8KTL-3PH		13 A*3
HYD 10KTL-3PH	30 A/30 A	16 A*3
HYD 15KTL-3PH		24 A*3
HYD 20KTL-3PH		32 A*3

DC switch parameters

Rated-Insulation Voltage	1500V
Rated Impulse Withstand Voltage	8KV
Suitability For Isolation	Yes
Rated Operational Current (Ie)	1100V/40A,800V/55A
PV Utilization Category	DC-PV2
Rated Short Time Withstand Current (Icw)	0.76kA .1S
Rated Short-Circuit Making Capacity (Icm)	1.4kA
Rated Making Capacity/Rated Breaking Capacity	1.4kA

PV terminal parameters

Rated-Insulation Voltage	1000V
Rated Operational Current	39A
Protection Class	IP68
Maximum Temperature limit	105℃

The DVC (decisive voltage classification) is the circuit voltage which constantly occurs between two arbitrary live parts during proper use in a worst-case scenario:

Table 5-2 Description of limits for DVC

DVC	Operating voltage limit(V)		
	Ac voltage (RMS)	Ac voltage (PK)	Dc voltage (AVG)
A	25 (16)	35.4 (22.6)	60 (35)
B	50 (33)	71 (46.7)	120 (70)
C	1000	4500	1500

- The values in brackets apply when the inverter is installed in a humid environment.

Table 5-3 The decisive voltage class (DVC)

Interface	DVC
PV input connection	DVCC
AC connection	DVCC
Battery connection	DVCC
Load connection	DVCC
USB/WiFi interface	DVCA
COM interface	DVCA
CT interface	DVCA
DRMs	DVCA
Link port	DVCA

5.2 Wiring overview

Table 5-4 Cable description

Component	Description		Recommended cable type
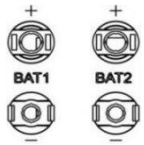	+ : Connect the positive cable of the lithium battery		Outdoor multicore copper cable (4...6mm²)
	- : Connect the negative cable of the lithium battery		
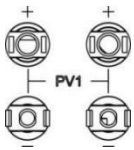	+ : Connect the positive cable of the PV array		PV cable (4...6mm²)
	- : Connect the negative cable of the PV array		
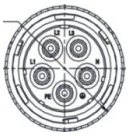	Connection method: male and female terminals are inserted into each other.	L1	Outdoor multicore copper cable 5K...8KTL-3PH 6...10mm² 10K...20KTL-3PH 8-10mm²
		L2	
		L3	
		N	
		PE	
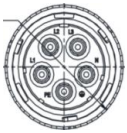	Connection method: male and female terminals are inserted into each other.	L1	Outdoor multicore copper cable 5K...8KTL-3PH 6...10mm² 10K...20KTL-3PH 8-10mm²
		L2	
		L3	
		N	
		PE	

5.3 System overview

There are different system configurations possible depending on the user's requirements, existing electrical infrastructure and local regulations. The distribution box must be configured to comply to the grid operator requirements.

The inverter has an integrated AC relay to disconnect all phases and Neutral from the grid in case of grid fault or grid outage.

The inverter's generation and feed-in limitation functions require the use of an external measurement device to obtain grid information.

There are 3 system configurations:

- System A: direct measurement of energy with CTs (up to 300 A)
- System B: measurement of energy with energy meter + CTs (default)
- System C: measurement of energy with directly connected energy meter

- For System B, customers can choose different CTs based on the installation. The secondary current must be 5 A.
- To ensure neutral continuity, the neutral of AC GRID must be connected together with the neutral of AC LOAD and must not be interrupted by switch.
- If the Main Switch is used residual current protection device, it is recommended to choose type A protector for RCD with leakage current of 100mA or above (it is better to adjust according to the size of the system).
- If the grounding type of the grid power distribution system requires the ground wire and the neutral wire to be connected together, a short-circuit bar needs to be used to short-circuit the neutral wire and the ground wire in the power distribution where the inverter output is connected to the grid.And circuit breakers and fuses are not allowed to be installed on the grounding wire.

CAUTION

In the following three situations, the system must be connected to the fuse first and then to the machine's input terminal:

- Lead-acid battery
- Lithium battery without BMS
- Multiple lithium batteries connected to one input

5.3.1 System A: direct measurement with CTs

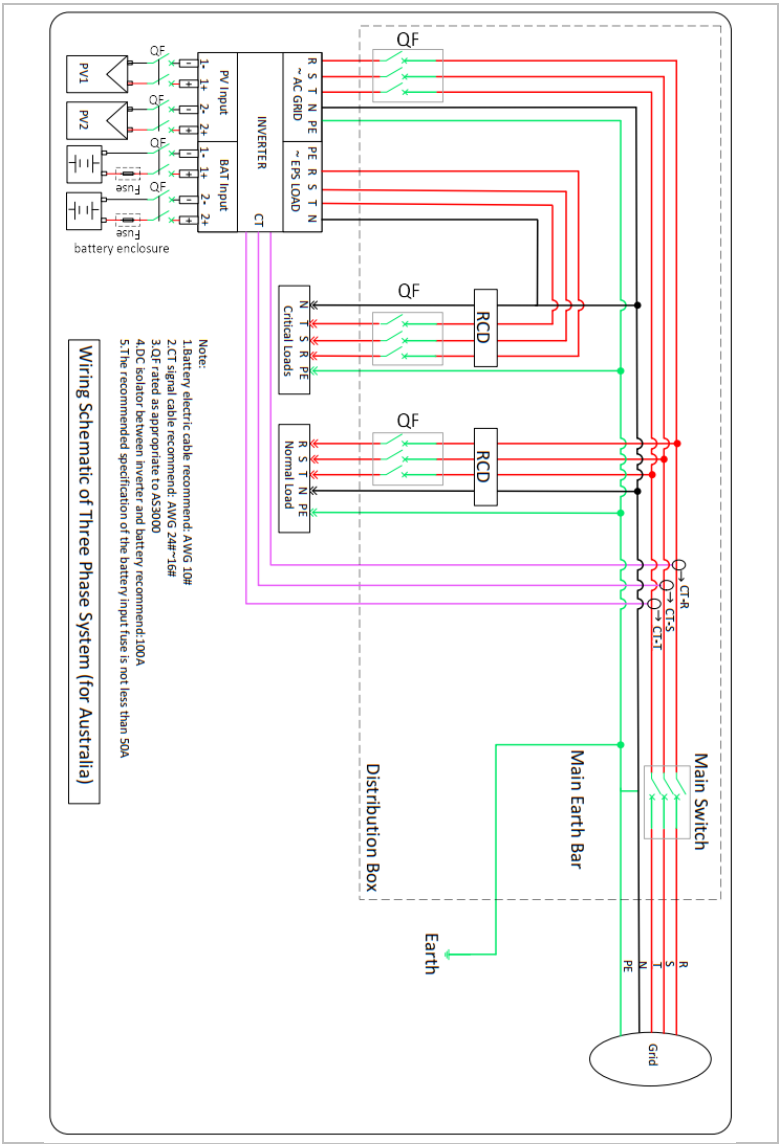

Figure 5-1 Electrical connections (Plan A: CTs)

5.3.2 System B: measurement with energy meter + CTs (default)

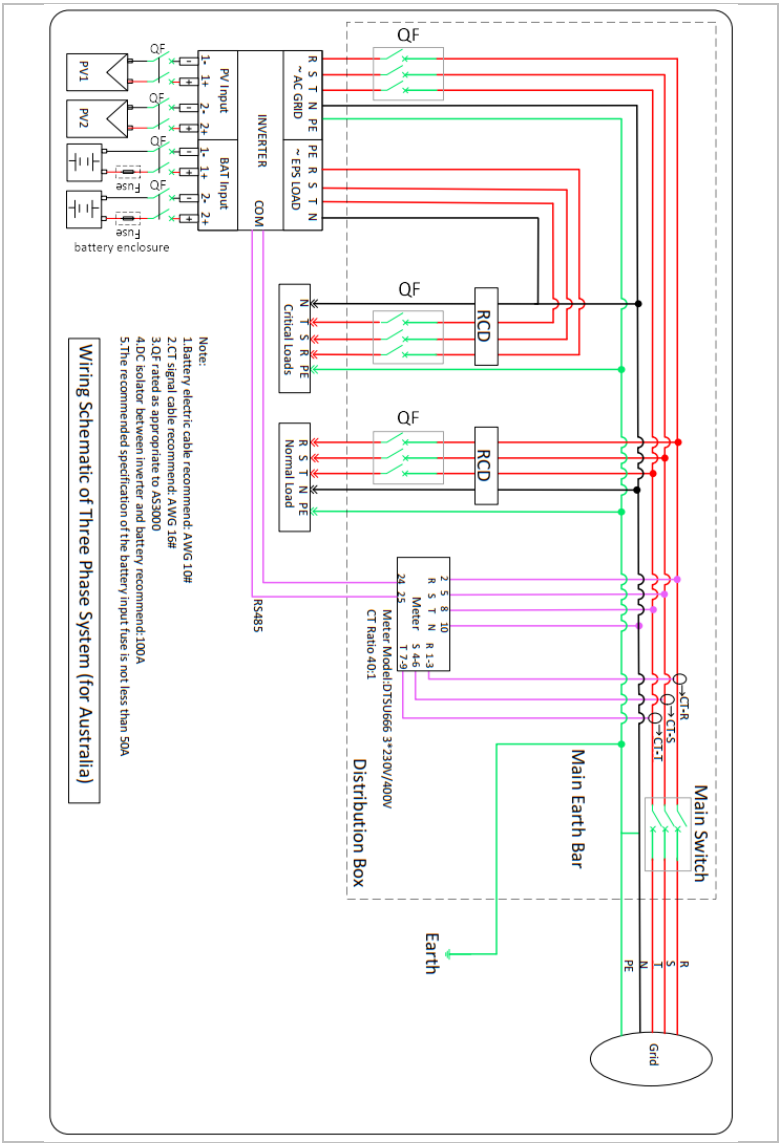

Figure 5-2 Electrical connections (Plan B: Meter+CT)

5.3.3 System C: measurement with directly connected energy meter

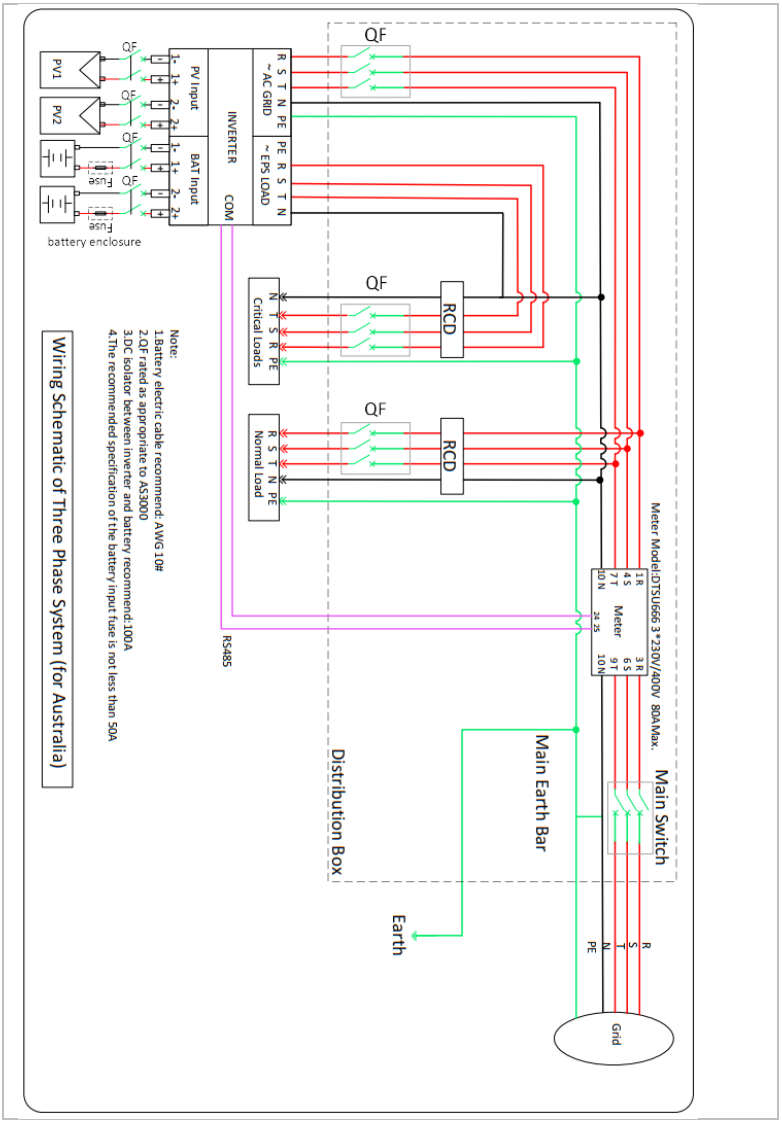

Figure 5-3 Electrical connections (Plan C: Meter)

Energy Meter through CTs:

Table 5-5 Smart Meter with CTs

Technical Data	
Voltage	AC 3×230/400 V
Current	1.5(6) A
Frequency	50/60 Hz
Pulse	6400 imp / kWh
Power accuracy	Active Class 0.5S, Reactive Class 2

Directly connected Energy Meter:

Table 5-6 Directly connected Smart Meter

Technical Data	
Voltage	AC 3×230/400 V
Current	5(80) A
Frequency	50/60 Hz
Pulse	400 imp / kWh
Power accuracy	Active Class 1, Reactive Class 2

To obtain grid information via System A:

Connect the wires according to the wiring method as shown in 5.3.1 "System A: direct measurement with CTs", and enable Anti-Reflux Power function and set the Reflux Power limit on the menu interface of the machine. Refer to <7.4 Advanced settings→3. Anti Reflux> in this manual for specific operation methods.

There are two situations when CT is installed. One is to connect in the correct CT direction. The direction should refer to the figure below, from the inverter to the power grid. One is the random CT direction, and then the use of CT calibration function for calibration. CT calibration procedures refer to this manual 7.4 Advanced settings>>9.CT calibration.

To obtain grid information via Plan B or C:

Wiring according to the wiring method as shown in 5.3.2“System B: measurement with energy meter + CTs” or 5.3.3“System C: measurement directly connected energy meter”, and enable Anti-Reflux Power function and set the Reflux Power limit on the menu interface of the machine. Refer to <7.4 Advanced settings→3. Anti Reflux> in this manual for specific operation methods.

Only installers and distributors have the permission to use the Bluetooth APP for setting, enabling/disabling settings, and setting up the Reflux Power limit. Refer to <7.4 Advanced settings→3. Anti Reflux> in this manual for specific operation methods.

Please Note:

Generation and Export Limit Control functions are set as follows:

User can set and check through LCD menu. Refer to <7.4 Advanced settings →3. Anti Reflux> and <7.4 System information→1. Inverter Info> .

Settings Main interface---Advanced Settings---Input 0001---Anti Reflux---Anti Reflux Mode---Control Mode---Control Type---Power limit .

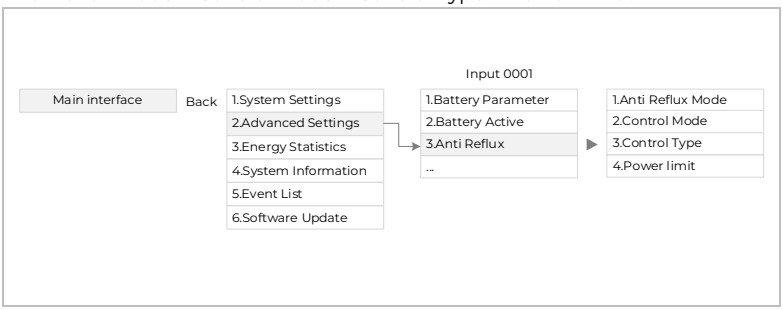

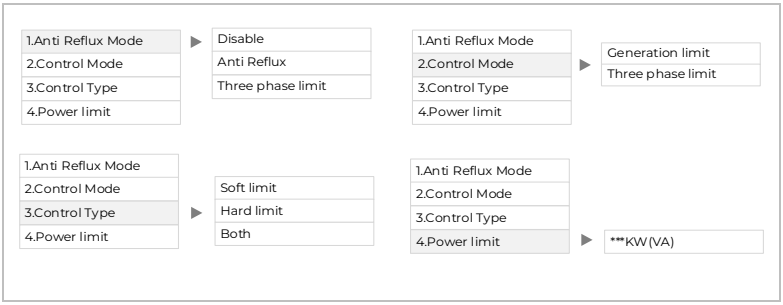

Checking Main interface---System Information---Inverter Info---Anti Reflux.

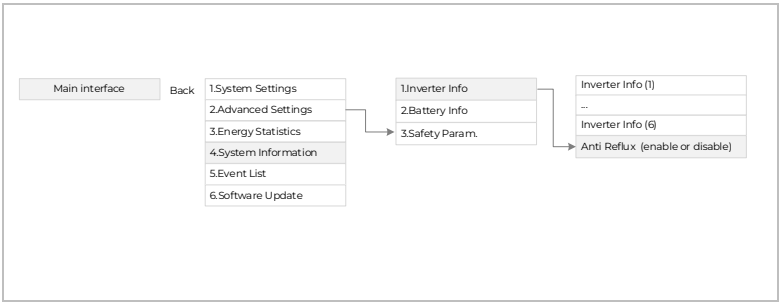

Anti-Reflux Power function =Generation or Export Limit Control function

Generation (or Export) limit =Generation (or Export) limit control

Reflux Power limit = (active or apparent) Power limit

When Anti-Reflux Power function is enabled, the reflux power of point of common coupling (PCC) will be limited to the set Reflux Power limit. Both Hard limit control and soft limit control can be used together. However, when Hard limit control is enabled, Anti-Reflux power cannot exceed the Reflux power limit. If the Reflux power exceeds the Reflux power limit, the inverter disconnects from the grid and triggers overload protection.

When communication signal with the electricity meter is lost, the output power of the inverter is limited to the value of soft limit control and does not trigger fault protection. When Hard limit control is enabled, a loss of communication with the meter will trigger the inverter into a fault protection state.

5.4 Electrical connection

The electrical connection is established as follows:

1. Connect PE cable
2. Connect DC input cable
3. Connect battery cable
4. Connect AC output power cable
5. Connect communication cable (optional

5.5 Connecting the PE cables

Connect the inverter to the equipotential bonding bar by using the protective earth cable (PE) for grounding.

NOTICE
Pole earthing not permissible! ▸ As the inverter is transformerless, the plus and minus poles of the PV generator must NOT be earthed. Otherwise, the inverter will malfunction. In the PV system, not all live metal parts (e.g. PV module frames, PV frame, generator connection box housing, inverter housing) require earthing.

1. Remove the insulation of the cable. For outside use, cables of ⩾ 4mm² are recommended for earthing).

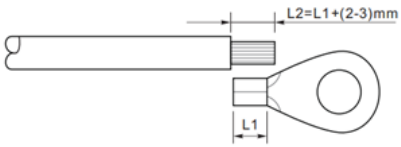

Figure 5-4 Connecting PGND cable(a)

- L2 is 2 to 3 mm longer than L1.

2. Crimp the cable to the ring terminal:

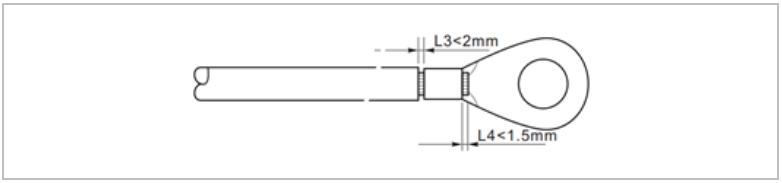

Figure 5-5 Connecting PGND cable(b)

3. Install the crimped ring terminal and the washer with the M6 screws and tighten these with a torque of 3 Nm using an Allen key:

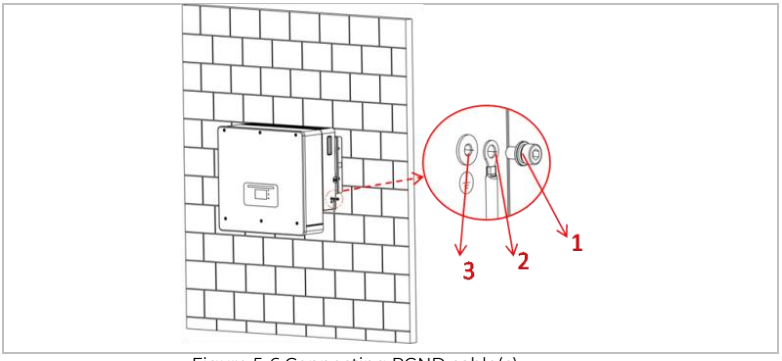

Figure 5-6 Connecting PGND cable(c)

①	M6 Screws	②	Ring terminal
③	Threaded hole		

5.6 Connecting the DC lines for the PV modules and battery

- The connection steps of the battery and PV are the same, only the terminal specifications are different. The colour of the battery terminal is blue, the colour of PV terminal is black.
- If only one set of batteries is required, ensure it is connected to the BAT 1 port, not the BAT 2 port.

Please observe the recommended cable dimensions:

Cable cross-section (mm²)		Outer diameter of cable (mm)
Range	Recommended value	
4.0 ... 6.0	4.0	4.5 ... 7.8

1. Remove the crimp contacts from the positive and negative connections.
2. Remove the insulation of the cables:

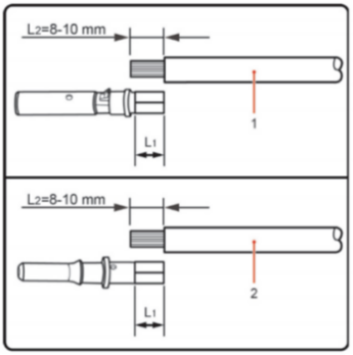

Figure 5-7 Connecting PV(a)

①	Positive DC cable	②	Negative DC cable

- L2 is 2 to 3 mm longer than L1

3. Insert the positive and negative DC cables into the corresponding cable glands.
4. Crimp the DC cables. The crimped cable must be able to withstand a tractive force of 400 Nm.

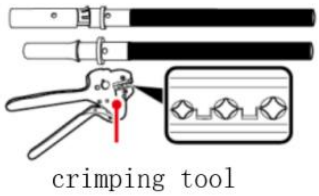

Figure 5-8 Connecting PV(b)

⚠ CAUTION

Danger of reverse polarity!

- Ensure that the polarity is correct before plugging into the DC connections!

5. Insert the crimped DC cables into the corresponding connector housing until you hear a "clicking" sound.

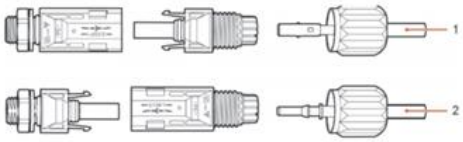

Figure 5-9 Connecting PV(c)

①	Positive power cable	②	Negative power cable

6. Re-screw the cable glands to the connector housing.

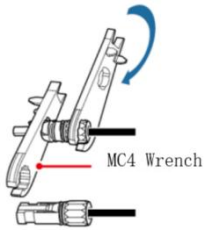

Figure 5-10 Connecting PV(d)

7. Insert the positive and negative connectors into the corresponding DC input terminals of the inverter until you hear a “clicking” sound.

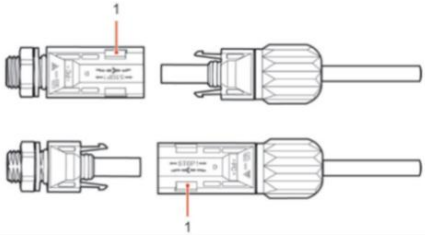

Figure 5-11 Connecting PV(e)

①	Locking

- Insert the protective caps into the unused DC connections.

⚠ CAUTION

Danger of DC arcing

- Before removing the plus and minus connector, ensure that the DC switch has been set to OFF.

In order to remove the plus and minus connection from the inverter, insert a removal key into the locking and press on the key with the adequate force as shown in the following illustration:

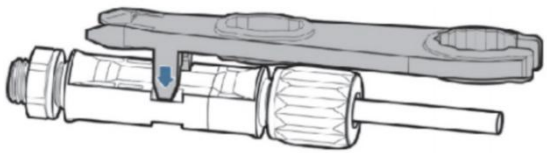

Figure 5-12 Connecting PV(f)

5.7 Connecting the AC power cables

The AC power cables are used to connect the inverter to the critical loads (through the EPS port), and the AC power distributor or the power grid.

⚠ CAUTION

AC connection

- Each inverter must have its own circuit breaker.
- The AC disconnecting device must be easily accessible.

- The inverter HYD 5K-20KTL-3PH has a built-in AFI (univ. sensitive residual current protection). If an external AFI is required, we recommend an AFI type A featuring a residual current of 100 mA or higher.
- Please follow the national rules and regulations for the installation of external relais or circuit breakers!

The AC cable should be correctly dimensioned in order to ensure that the loss of power in the AC cable is less than 1% of the rated output. If the AC cable resistance is too high, then the AC voltage will increase; this may cause

the inverter to become disconnected from the power grid. The relationship between the leakage power in the AC cable and the cable length, the cable cross-section, is displayed in the following illustration:

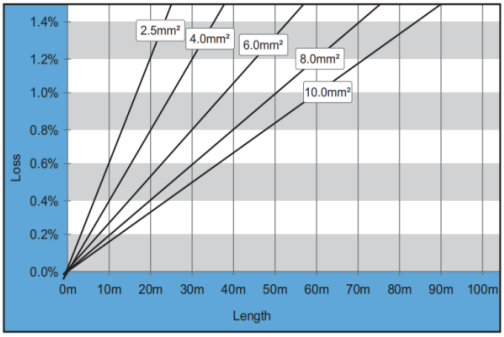

Figure 5-13 The relationship between the leakage power and cable length

5.8 AC connector installation

⚠ CAUTION

Electrical voltage

- Ensure that the grid has been switched off before removing the AC connector

Please follow below steps to install the AC connector.

1. Select the suitable cable in accordance with above diagram. Remove the insulating layer of the AC output cable using a wire stripper and in accordance with the following illustration:

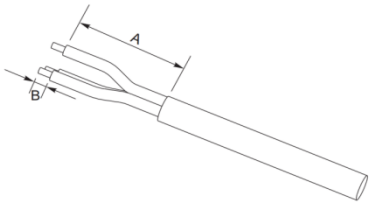

A = 30 ···50 mm

B = 3···5 mm

2. Disassemble the connector in accordance with the following illustration. Guide the AC output cable through the cable gland.

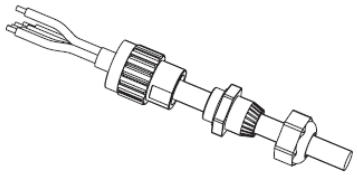

3. Connect the AC cable in accordance with the following requirements and tighten the terminal using the Allen key.

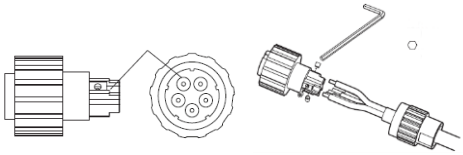

Connection	Cable
L1	Phase 1 (brown)
L2	Phase 2 (black)
L3	Phase 3 (grey)
N	Neutral conductor (blue)
PE	Earthing cable (yellow-green)

4. Assemble the connector housing and screw the cable gland tight.

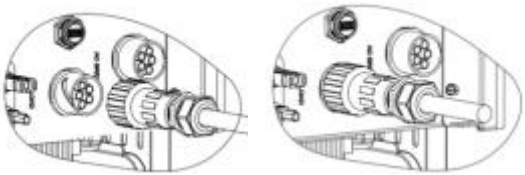

5. Connect the AC connector to the AC connection of the inverter by turning it clockwise until it locks into place.

- Remove the AC connector by turning it anticlockwise.
- When you use the meter connection function, make sure that the AC terminal cable corresponds to the meter cable one by one(L1, L2, L3, N, and PE cables)

6. Connector accessories are divided into upper and lower parts. Attach the connector accessories to the connector and fasten. Use a cross screwdriver.

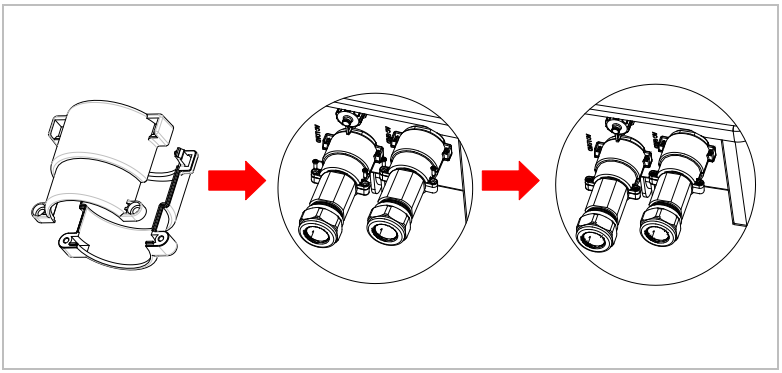

5.9 Communication interfaces

The positions of the communications interfaces of the HYD 5K ... 20KTL-3PH are displayed below:

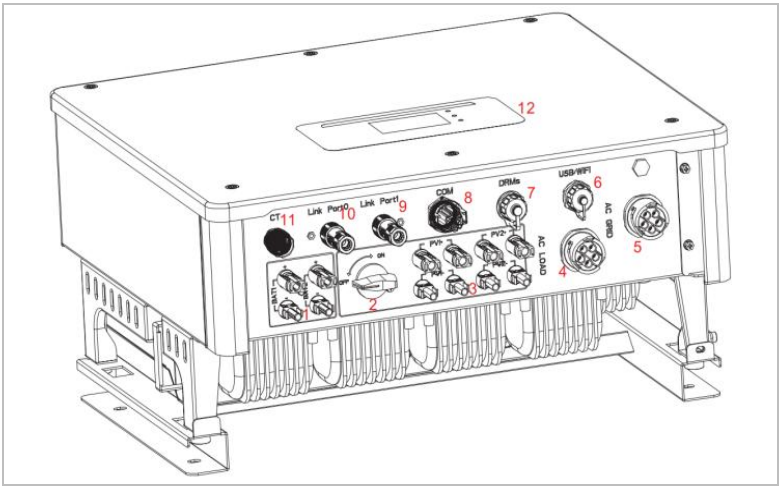

No.	Connection	Function
⑥	USB/WiFi	USB port for firmware update and safety parameter import; Port to connect Stick Logger (WiFi)
⑦	DRMs	Demand Response Modes/Logic Interface to control the inverter
⑧	COM	Multifunctional Communication Port
⑨	Link port 1	Master/Slave operation of multiple inverters
⑩	Link port 0	
⑪	Current sensor connection (CT)	For configurations according to System A, CTs are directly connected to the inverter without an energy meter.

5.9.1 Multifunctional Communication Port

Please refer to the following table for the specific PIN assignments.

①

②

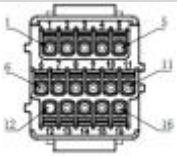

③

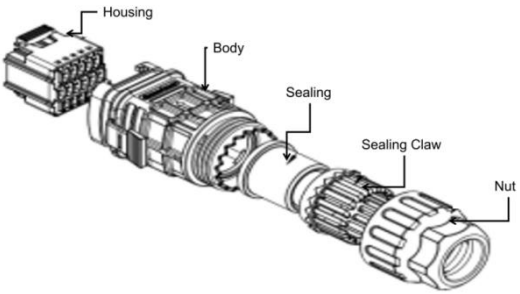

④

PIN	Definition	Function	Note
1	RS485A1-1	RS485differential signal+	Wired monitoring or inverter cascade monitoring
2	RS485A1-2	RS485differential signal+	
3	RS485B1-1	RS485differential signal–	
4	RS485B1-2	RS485differential signal–	
5	RS485A2	RS485differential signal+	Communicate with electricity meters
6	RS485B2	RS485differential signal-	

PIN	Definition	Function	Note
7	CAN0_H	CAN high data	Used for communication with lithium battery BMS, the inverter can automatically identify the battery BMS communication as CAN or RS485 communication
8	CAN0_L	CAN low data	
9	GND.S	BMS communication GND	
10	485TX0+	RS485differential signal+	
11	485TX0-	RS485differential signal-	
12	GND.S	Signal GND	Inner BMS battery temperature sampling
13	BAT_Temp	Battery temperature sampling	
14	DCT1	Dry Contact1	Providing electrical switching function
15	DCT2	Dry Contact2	
16	VCC	Communication VCC	12V power supply

5.9.2 RS485

For the monitoring and control of several inverters, you connect the RS485 wires in daisy-chain.

At the first and the last inverters, you need to terminate the bus with an 120 Ohm resistor between Pin 1 and 4.

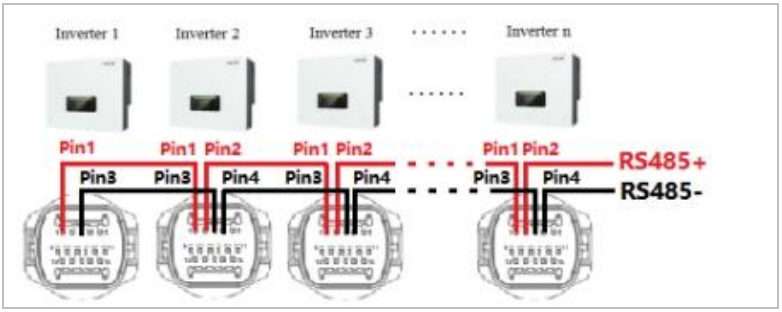

Figure 5-14 RS485 communication connection

5.9.3 Smart meter

The integrated energy management functions integrated of the HYD 5-20KTL-3PH require to measure the power flow at the point of grid interconnection. There are different system configurations possible. It can be measured using directly connected smart meter or using smart meter with CTs.

Please refer to below table for the PIN assignments for the RS485 connection between the inverter and the smart meter.

Please refer to below table for the PIN assignments for the RS485 connection between the inverter and the energy meter.

Inverter COM Port Pin	Function	Meter Pin
Pin 5	RS485+ (A2)	Pin 24
Pin 6	RS485- (B2)	Pin 25

- The Smart meter shows a positive power value for feed-in to the grid, and a negative value for energy purchase from the grid.
- Use the shielded twisted pair cable.
- The copper outer diameter should be more than 0.5 mm².
- Keep away from power cables or other electric fields.
- Use termination resistors at the ends of the RS485 line to improve signal quality.

Connect the grid phases to the Smart Meter Pins according to below drawing for correct functionality of the inverter.

Smart meter with directly connection (System C, default configuration)

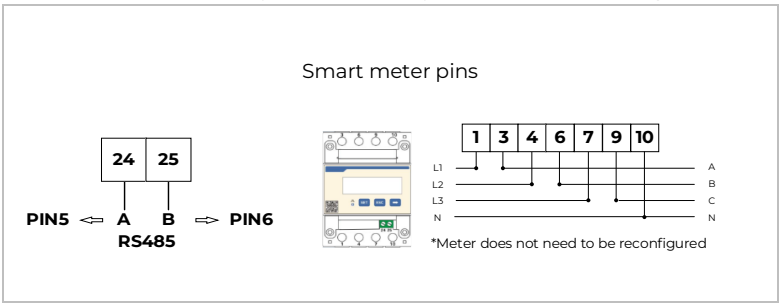

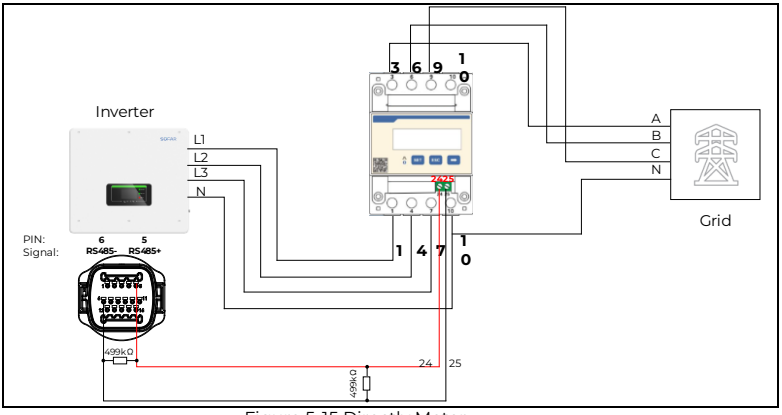

Figure 5-15 Directly Meter

- No additional configuration required for direct-connected meters
- Up to 80 A measurement
- Accuracy class and load rating (VA/Ω):1 class
- Rated operating voltage: AC 0.66KV (Equivalent to 0.69KV GB156-2003)
- Rated frequency: 50-60Hz
- Ambient temperature: -25℃~75℃
- Altitude: ≤3000m

Smart meter with CTs connection (System B)

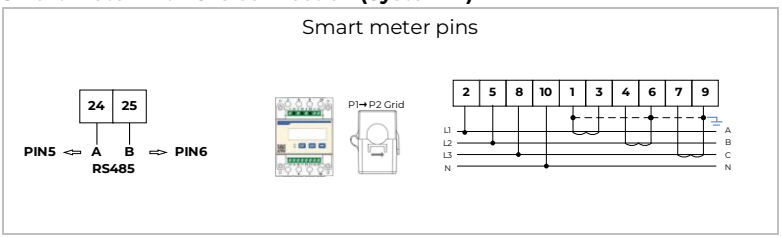

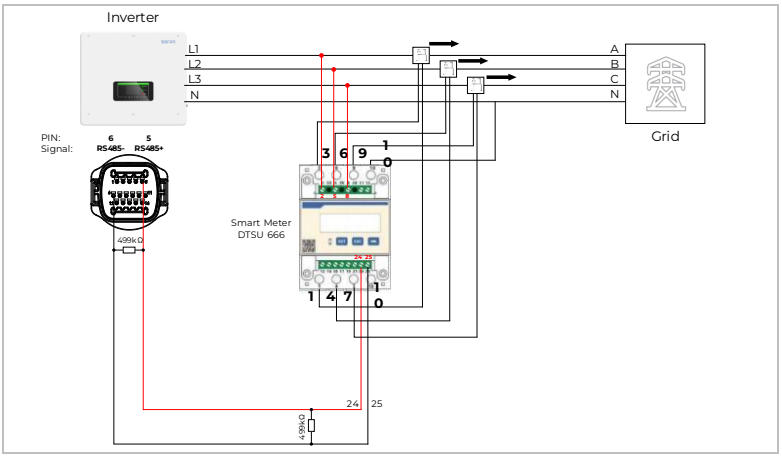

Figure 5-16 RS485 communication connection and smart meter with CTs

- The arrows on the current transformers direct to the grid.
- Up to 200 A measurement
- Accuracy class and load rating (VA/Ω):1 class

- Rated operating voltage: AC 0.66KV (Equivalent to 0.69KV GB156-2003)
- Rated frequency: 50-60Hz
- Ambient temperature: -40℃…85℃
- Altitude: ≤3000m

Smart Meter Configuration

The smart meter is preconfigured to be used with the inverter with these settings:

- Modbus Address: 1
- Baud Rate: 9600
- Current Ratio: 40:1

In case you want to change or check the settings, please refer to below procedure:

Modbus Address and Baud Rate setting

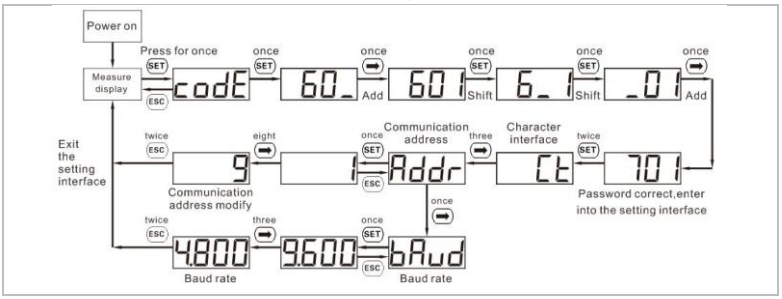

Current Ratio setting

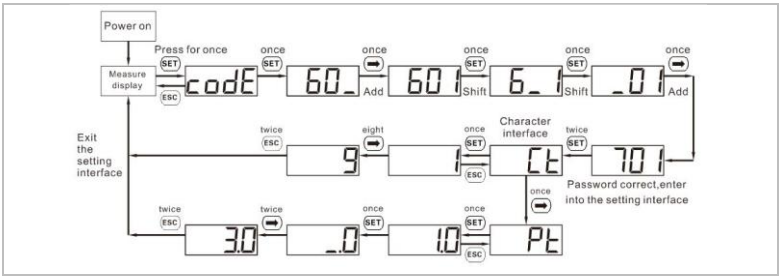

- The inverter connected to the meter is a power generation device, and the function of the meter connected to the traditional load (electrical device) is opposite. Therefore, for our product, when the power is output to the grid, the electricity meter will show a positive value, and when the power is purchased from the grid, it will show a negative value.
- The smart meter comes with 2 terminal resistors, In the actual configuration, the customer can parallel a terminal resistor at each end of the cable to reduce signal reflection in the communication cable.

5.9.4 Temperature Sensor

For batteries without a BMS (for example lead-acid batteries), you need to connect the temperature sensor which is within the scope of supply. Place the sensor at the battery.

5.9.5 BMS connection

For batteries with a BMS (for example Li-Ion batteries), you need to connect either the CAN Bus or RS485 with the battery management system.
The inverter will use the CAN Bus or RS485 Bus according to the battery selection in the inverter's menu.

Connecting GTX 3000-H

For connecting the GTX 3000-H battery to the inverter, please follow the below pin assignments:

Inverter COM Port	Function	GTX 3000-H communication cable	Battery "Link In" Port
Pin 7	CAN0_H	White-orange	Pin 2
Pin 8	CAN0_L	Orange	Pin 4

Connecting the BTS 5K battery

For connecting the BTS 5K battery to the inverter, please follow the below pin assignments:

Inverter COM Port	Function	BTS communication cable	Battery "Link In" Port
Pin 7	CAN0_H	Blue	Pin 4
Pin 8	CAN0_L	Blue-white	Pin 5

5.9.6 Dry Contact

The dry contact signals the on-grid and EPS mode through a signal voltage of 12 VDC. Alternatively, the switch contact can start and stop a generator to charge the battery.

- This function is available from Firmware V10

The dry contact settings must be set accordingly in the menu Advanced settings – Dry Contact Control.

On-grid / EPS mode

Below is the diagram for switching mode 1 (Relay Open In EPS) and how it can be used to switch a N-PE connection during off-grid mode:

On-grid (relay mode 1 "Relay Open In EPS"):

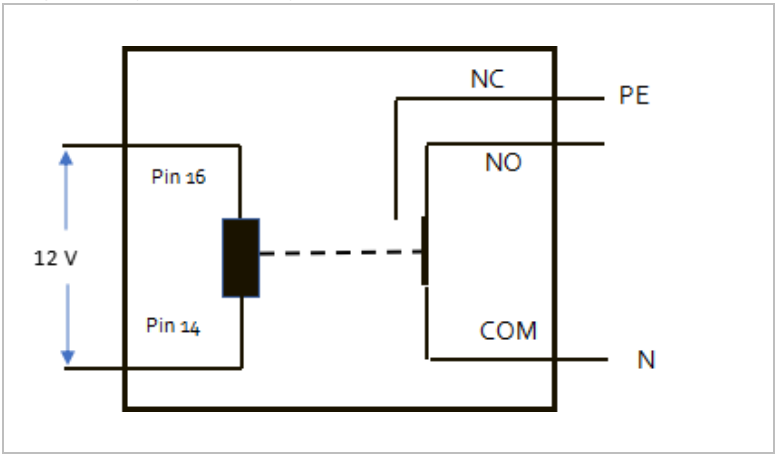

EPS mode (relay mode 1 "Relay Open In EPS"):

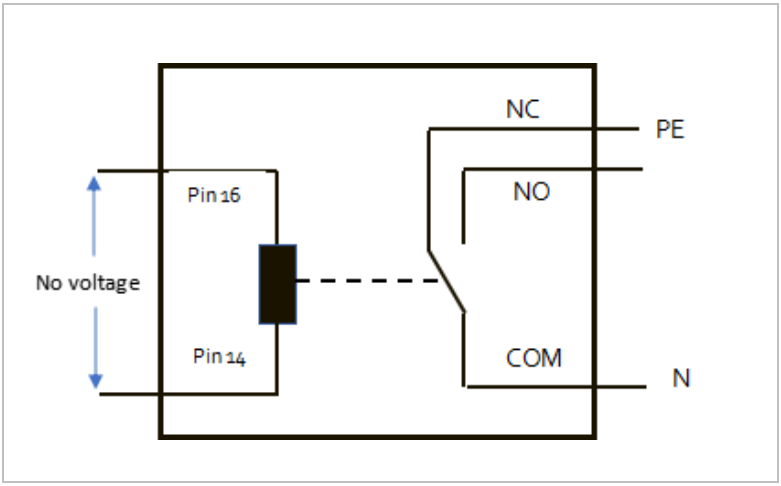

Relay mode 2 (Relay Close In EPS) switches the contact in the opposite direction, i.e. in the on-grid mode there is no voltage, in the EPS mode there is voltage.

Generator charging

Please refer to below diagram for connecting a generator:

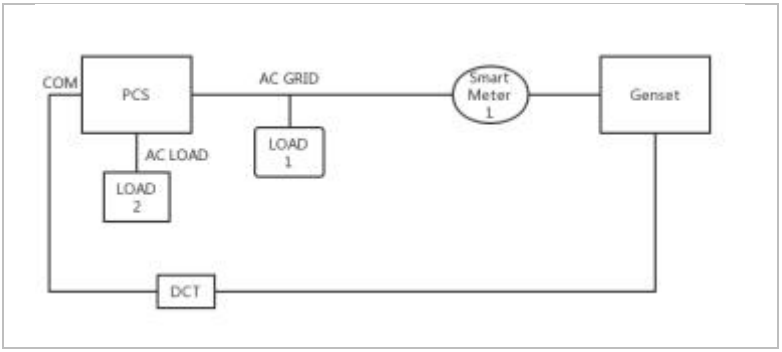

The settings are explained in the menu structure.

5.9.7 Communication power supply

The power supply can be used for the external power supply, or for the switching contact. Max. 400 mA / 5 W.

5.9.8 CT Interface

For configurations according to System A, CTs are directly connected to the inverter without an energy meter.

These CTs must be purchased separately and need to have a max. current rating of 100 mA at the inverter connection.

Please refer to the table below for the specific PIN connections.

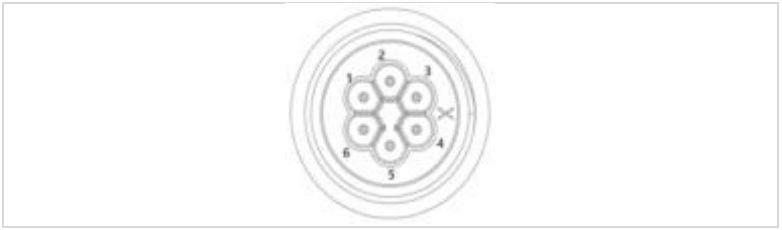

Pin	Definition	Function
1	Ict_R-	Phase R – (Phase L1 -)
2	Ict_R+	Phase R + (Phase L1 +)
3	Ict_S-	Phase S – (Phase L2 -)
4	Ict_S+	Phase S + (Phase L2 +)
5	Ict_T-	Phase T – (Phase L3 -)
6	Ict_T+	Phase T + (Phase L3 +)

Follow below steps to install the CTs.

1. Fix the cables on the terminals according to above table, and put the connector housing over the terminals.

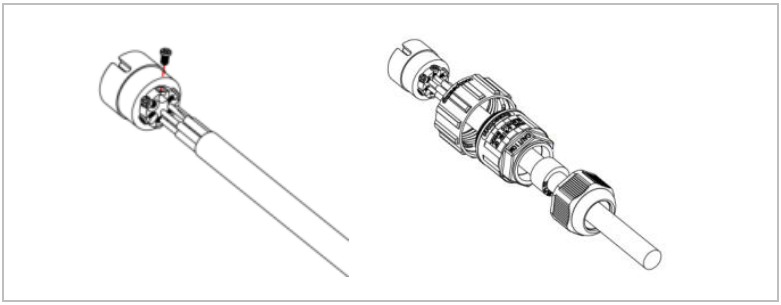

2. Connect and lock the connector by turning it clockwise.

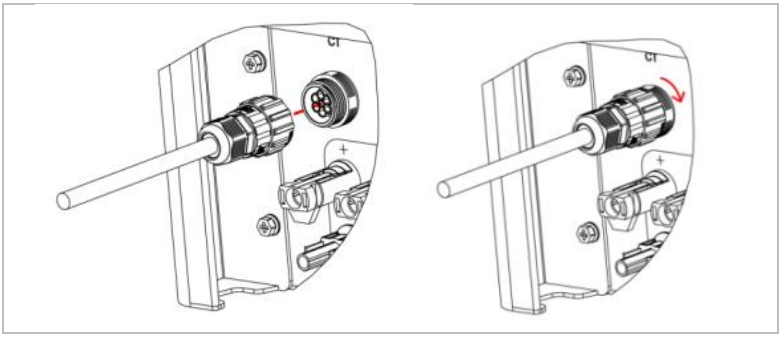

5.9.9 Link Port

In systems with multiple inverters, you can connect the devices in a Master/Slave configuration. In this configuration, only one energy meter is connected to the Master inverter for the system control.

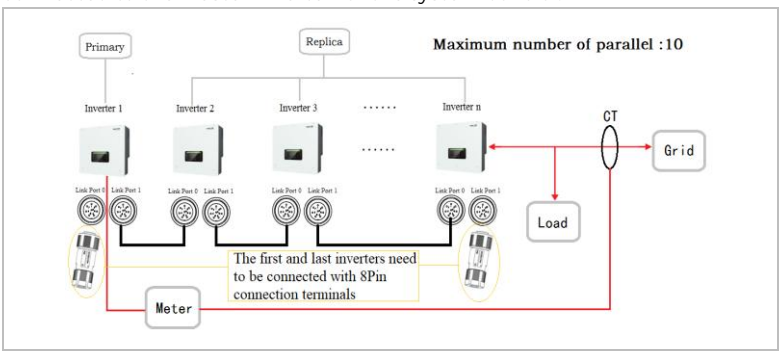

- The first and last inverter need to be connected with the 8 Pin connection terminals!

Pin Connections

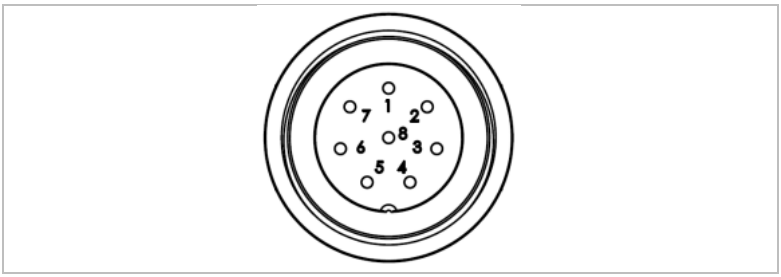

Pin	Definition	Function
1	IN_SYN0	Synchronising signal 0
2	CANL	CAN low data
3	SYN_GND0	Synchronising signal GND 0
4	CANH	CAN high data

5	IN_SYN1	Synchronising signal1
6	SYN_GND1	Synchronising signal GND 1
7	SYN_GND2	Synchronising signal GND 2
8	IN_SYN2	Synchronising signal 2

Installation

1. Connect and lock the connector by turning clockwise:

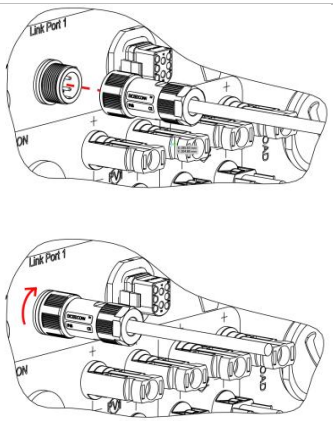

5.9.10 DRMs/Logic interface

The DRMs/Logic interface is used to control the inverters feed-in or purchases power by external signals, usually provided from grid operators with ripple control receivers or other means. The DRM0 can be used for a switch off signal from external grid protection devices.

The logic interface pins are defined according to different standard requirements.

Please consider the following PIN assignment.

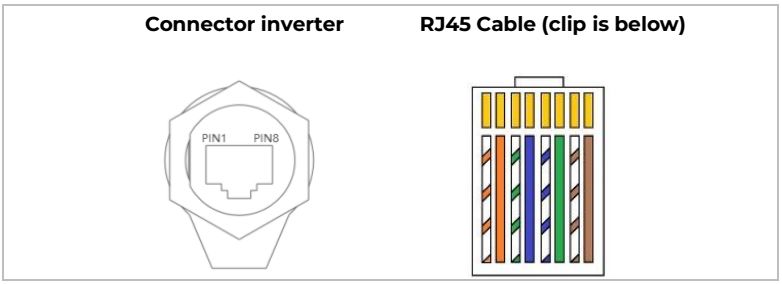

Please follow below installation steps.

1. Press the wire terminals in colour sequence:

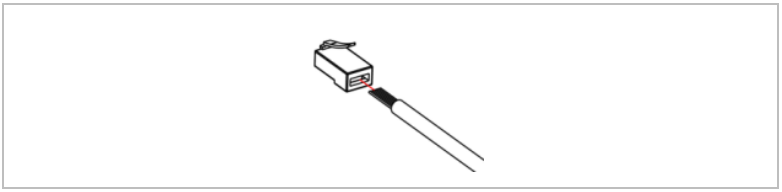

2. Route the cable terminal through the cable gland and insert the communication cable into the RJ45 connector.

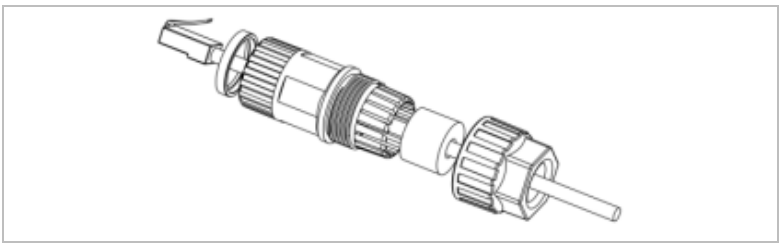

3. Lock the connector by turning clockwise:

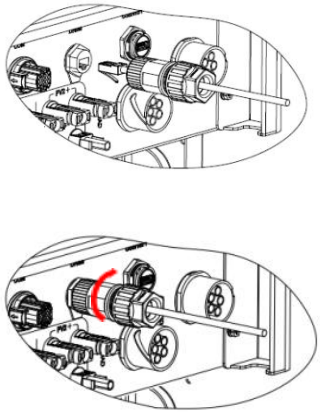

DRMs for AS/NZS 4777.2:2015 and AS/NZS 4777.2:2020

Also known as Inverter Demand Response Modes (DRMs).

The inverter recognises all supported Demand Response commands and initiates the reaction within two seconds. The inverter will continue to respond while the mode remains asserted.

Supported DRM commands: DRM0, DRM5, DRM6, DRM7, DRM8.

Pin	Colour	Function
1	orange/white	DRM1/5
2	orange	DRM2/6
3	green/white	DRM3/7
4	blue	DRM4/8
5	blue/white	DRM0
6	green	RefGen
7	brown/white	Internally shorted
8	brown	

Demand response modes (DRMs)

Demand response mode	Real current limit (referenced to inverter rated per phase current)	Reactive current limit (referenced to inverter rated per phase current)	Switching time limit
DRM0	0	0	2 s
DRM 1	Import =0	0	2 s
DRM 2	Import<50%	As per Clauses 5.5,6.2 and DRM 3 and DRM 7	2 s
DRM3	Import<75%	Within 5%of set-point per Clause 6.2	2 s
DRM4	Not limited	As per Clauses 5.5,6.2 and DRM 3 and DRM 7	2 s
DRM5	Generate=0	0	2 s
DRM6	Generate<50%	As per Clauses 5.5,6.2 and DRM 3 and DRM 7	2 s
DRM7	Generate<75%	Within 5%of set-point per Clause 6.2	2 s
DRM8	Not limited	As per Clauses 5.5,6.2 and DRM 3 and DRM 7	2 s

- For DRM 0, DRM 1 and DRM 5, current draw due to sensing and DRED circuits is allowable (see Clause 7.2).

Logic interface for VDE-AR-N 4105:2018-11

This function serves to control and/or limit the output power of the inverter. The inverter can be connected to a radio ripple control receiver in order to dynamically limit the output power of all inverters within the system.

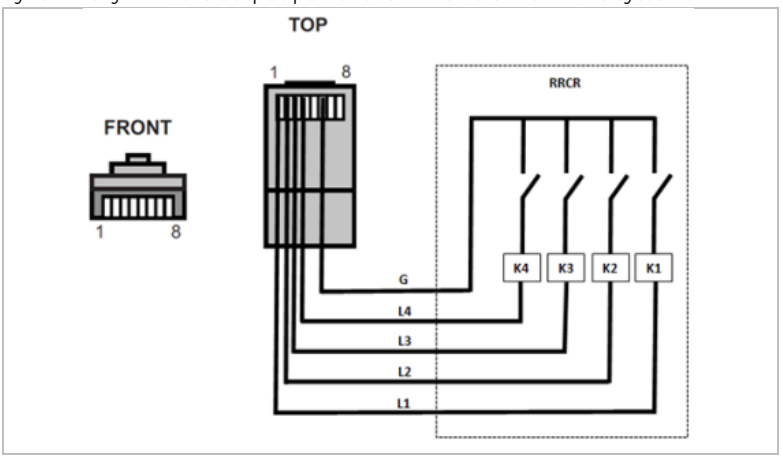

The inverter is preconfigured on the following power levels:

Pin	Name	Inverter	Radio ripple control receiver
1	L1	Relay 1 input	K1 - output relay 1
2	L2	Relay 2 input	K2 - output relay 2
3	L3	Relay 3 input	K3 - output relay 3
4	L4	Relay 4 input	K4 - output relay 4
6	G	Ground	Relay, common ground

Logic interface for EN50549-1:2019

The active power output can be ended within five seconds following a command to the input interface.

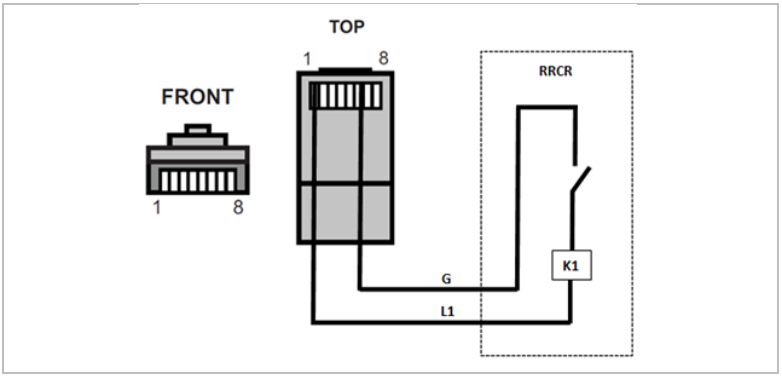

Functional description of the terminal

Pin	Name	Inverter	Radio ripple control receiver
1	L1	Relay 1 input	K1 - output relay 1
6	G	Ground	Relay, common ground

The inverter is preconfigured on the following power levels.

Relay status: Closing is 1, opening is 0

L1	Active power	Power drop rate	Cos (φ)
1	0%	< 5 seconds	1
0	100%	/	1

5.10 Feed-in limitation function

The feed-in limitation function can be used to limit the power fed back into the grid. For this function, a power measurement device must be installed according to system A, B, or C.

Feed-in limitation: The sum of the feeding-in phases must not exceed the set power limitation value. The power of phases drawing power from the grid is disregarded here.

3-phase limit: The sum of the feed-in power of all three phases must not exceed the set power limit value. This setting is suitable for balancing metering, as is common in Germany, for example.

- For the 3-phase limit setting, the current sensors must be correctly assigned to phases L1, L2 and L3 on the electricity meter!
- If communication with the smart meter is interrupted, the inverter limits its output power to the set power limit value.

5.11 System monitoring

The HYD 5-20KTL-3PH inverters provide various communication methods for the system monitoring:
RS485 or WiFi stick (standard), or Ethernet stick (optional).

5.11.1 RS485

You can connect RS485-linked devices to your PC or a data logger via an RS485 USB adapter. Please refer to the pin assignment in paragraph 5.9.2.

- The RS485 line may not be any longer than 1000 m
- Assign each inverter its own modbus address (1 to 31) via the LCD display

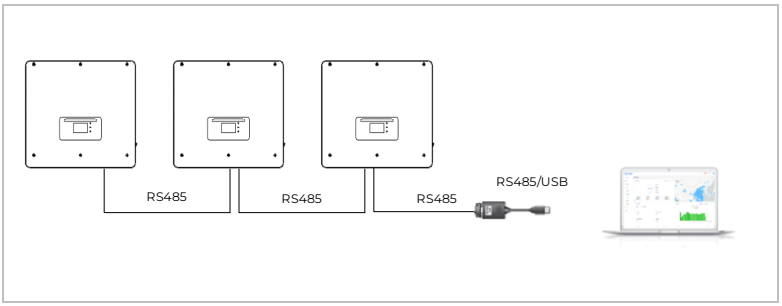

5.11.2 WiFi, Ethernet stick

When you have installed the stick logger, the inverters can directly upload your operating, energy and alarm data in the SolarMAN monitoring portal.

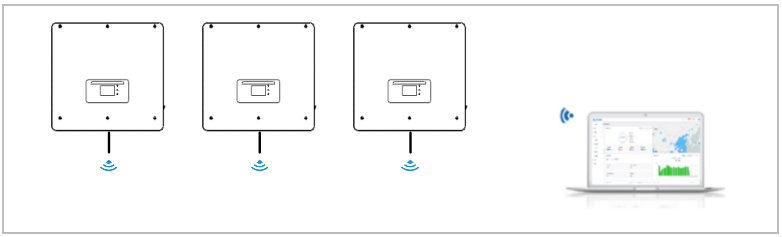

5.12 Installation of the WiFi, or Ethernet stick

1. Remove the protective cap from the USB interface.
2. Install the WiFi/Ethernet stick.
3. Tighten the connecting nut.

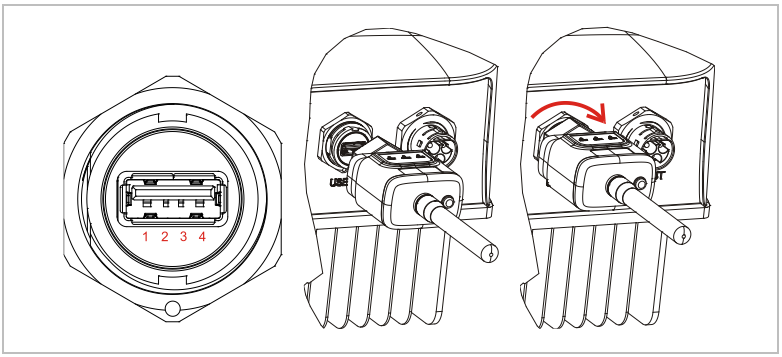

5.12.1 Configuration of the WiFi stick via the web browser

Preparation: The WiFi stick is installed in accordance with the previous section and the SOFAR inverter must be in operation.

Carry out the following steps in order to configure the WiFi stick:

1. Connect your PC or smartphone with the WiFi network of the WiFi stick. The name of this WiFi network is "AP", followed by the serial number of the WiFi stick (see rating plate). When you are prompted for a password, you can find it on the label of the WiFi stick (PWD).
2. Open an Internet browser and enter the address **10.10.100.254**.
3. Recommended browsers: Internet Explorer 8+, Google Chrome 15+, Firefox 10+
4. Enter the username and password, which are both set to **"admin"** by default. The "Status" page will be opened.
5. Click on the "Wizard" in order to configure the WiFi stick for Internet access.

↳ The WiFi stick begins to send data to SolarMAN.

Register your system at the website home.solarmanpv.com. For this, enter the serial number found on the stick logger.

Installers use the portal at pro.solarmanpv.com

5.12.2 Setting up the WiFi stick with the app

To download the app, search for "SOLARMAN" in the Apple or Google Play store, or use the following QR codes:

- **SOLARMAN Smart** (for end customers):

- **SOLARMAN Business** (for installers):

Configuration steps

1. After starting the app, register as a new user or enter the current solarMAN access data.
2. Create a new system and save the system data.
3. Scan the barcode of the stick logger to assign an inverter to the system.
4. Go to the newly created system in order to configure the stick logger (device/logger)
5. Press the button on the WiFi stick for 1 second to activate the WPS mode of the stick so that the smartphone can be connected to the WiFi stick.
6. Now, select your local WiFi network for Internet access and enter your WiFi password.
7. The WiFi stick is configured with the access data.

WiFi stick status

The LEDs on the WiFi stick provide information regarding the status:

LED	Status	Description
NET	Communication with the router	On: Connection to server successful
		Flashing (1 sec.): Connection to router successful
		Flashing (0.1 sec.): WPS mode active
		Off: No connection to router
COM	Communication with inverter	Flashing (1 sec.): Communication with inverter
		On: Logger connected to inverter
		Off: No connection to inverter
READY	Logger status	Flashing (1 sec.): Normal status
		Flashing (0.1 sec.): Reset running
		Off: Error status

Reset button

Keystroke	Description
1 sec.	WPS mode
5 sec.	Restart
10 sec.	Restart (reset)

5.12.3 Setting up the Ethernet stick

The Ethernet stick is delivered with DHCP as standard, so it automatically gets an IP address from the router.

If you wish to set up a fixed IP address, connect a PC to the Ethernet stick and open the configuration page via the web address **10.10.100.254.**

6 Commissioning the inverter

6.1 Safety test before commissioning

NOTICE
Check the voltage range ▸ Ensure that the DC and AC voltages are within the permissible range of the inverter.

6.2 Double Check

Please ensure that the inverter and all the wiring are installed correctly, securely, and reliably, and that all environment requirements are met.

1. Inverter is firmly fastened to the mounting bracket on the wall.
2. PV+/PV- wires are firmly connected, polarity and voltage are correct.
3. BAT+/BAT- wires are firmly connected, polarity and voltage are correct.
4. DC isolator is correctly connected between battery & inverter, DC isolator: OFF.
5. GRID / LOAD cables are firmly / correctly connected.
6. AC circuit breaker is correctly connected between inverter GRID port & GRID, circuit breaker: OFF.
7. AC circuit breaker is correctly connected between inverter LOAD port & critical load, circuit breaker: OFF.
8. For lithium battery, please ensure that the communication cable has been correctly connected.
9. For the lead-acid battery, please ensure that the NTC wire has been correctly connected.

6.3 Starting the inverter

Please follow below steps to switch the inverter ON.

1. Make sure there's no power generation in inverter from grid.
2. Turn ON DC switch.
3. Switch ON the battery. Turn ON DC isolator between battery & inverter.
4. Turn ON AC circuit breaker between the inverter GRID port & GRID.
5. Turn ON AC circuit breaker between the inverter LOAD port & critical load.
6. Inverter should start to operate now.

- If backup is installed, please ensure that the EPS mode is enabled.

6.4 Initial setup

You need to set the following parameters before inverter starts to operate.

Parameter	Note
1. Language setting	The default is English
2. System time setting	If you are connected to the server or using the App, the time is set to the local time automatically
3. Safety parameter import	You need to read the Country Code setting from a USB drive. Alternatively, the mobile app "Sofar View" can be used for this setting, if you are logged in as a validated installer
4. Set the input channel	With the Input Channel Configuration you define if PV and / or batteries are connected and in what configuration. If an input channel is not used, select (Not use)
Bat Channel1	If a battery is connected to BAT1 input, select "Bat Input1", otherwise "Not Use"
Bat Channel2	if a second battery is connected to BAT2 independently, select "Bat Input2"

	If one battery is connected in parallel to BAT1 and BAT2, select “Bat Input1”, otherwise “Not Use”
5. Set battery parameters	Default values can be set according to the input channel configuration in Menu Advanced Settings – Battery Parameter:
	Select Battery Type
	Max. charging current (25A)
	Max. discharging current (25A)
	Discharge Depth（80%）

The default operating mode is the Self-use Mode.

EPS Mode, Unbalanced Support, Anti-Reflux Mode, IV-Curve Scan and Logic interface are disabled.

6.4.1 Configuring the battery setup

The HYD 5-8KTL-3PH models have one battery input (max. current 25 A).

The HYD 10-20KTL-3PH models have two battery inputs (max. current 25 A / 25 A).

Battery inputs can be connected and set in parallel mode to reach 50 A / 70 A.

6.4.2 Configuring Parallel Inverter System

To increase the system's EPS and grid power, the HYD 5-20KTL-3PH can be parallelly connected at the Grid port and the EPS port.

For the communication setup, please follow the following steps:

1. Set the Master unit
2. Set the Slave units

- Each inverter must have a unique parallel address

Setting the country code

- Different distribution network operators in various countries have differing requirements for the grid connection of grid-coupled PV inverters.
- Ensure that you have selected the correct country code according to regional authority requirements, and consult a qualified electrician or employees of electrical safety authorities.
- SOFARSOLAR is not responsible for the consequences of selecting the incorrect country code.
- The selected country code influences the device grid monitoring. The inverter continuously checks the set limits and, if required, disconnects the device from the grid.

- For an updated list of country codes according to the Firmware version, just you can check the document under this link: https://sofarsolar.jianguoyun.com/p/DeanPg4Q4c_MChi404MGIAA

For The Australian Market:

For compliance with AS/NZS 4777.2:2020 please select from

002-000 Australia A (Australia Region A)

002-008 Australia B (Australia Region B)

002-009 Australia C (Australia Region C)

Please contact your local grid operator for which option to select.

- By selecting 002-000 Australia A, 002-008 Australia B or 002-009 Australia C the power quality response mode and grid protection settings will be reset to their default values for Australia Region A, B, C respectively.

Default grid settings for different regions are shown in the following table:

Protective function	Protective function limit	Trip delay time	Maximum disconnection time
Undervoltage 2(V<<)	70V	1s	2s
Undervoltage 1(V<)	180V	10s	11s
Overvoltage 1(V>)	265V	1s	2s
Overvoltage 2(V>)	275V	-	0.2s

	Region	Australia A	Australia B	Australia C	New Zealand
Under-frequency 1(F<)	Protective function limit value	47Hz	47Hz	45Hz	45Hz
	Trip delay time	1s	1s	5s	1s
	Maximum disconnection time	2s	2s	6s	2s
Over-frequency 1(F>)	Protective function limit value	52Hz	52Hz	55Hz	55Hz
	Trip delay time	-	-	-	-
	Maximum disconnection time	0.2s	0.2s	0.2s	0.2s

Default volt-watt settings for different regions are shown in the following table:

Region	Default value	VL2	VL1	VW1	VW2
Australia A	Voltage	207	215	253	260
	Inverter output (P) % of Srated	20%	100%	100%	20%
Australia B	Voltage	195	215	250	260
	Inverter output (P) % of Srated	0%	100%	100%	20%
Australia C	Voltage	207	215	253	260
	Inverter output (P) % of Srated	20%	100%	100%	20%

Default volt-var settings for different regions are shown in the following table:

Region	Default value	VV1	VV2	VV3	VV4
Australia A	Voltage	207	220	240	258
	Inverter reactive output (Q) % of Srated	44% supplying	0%	0%	60% sinking
Australia B	Voltage	205	220	235	255
	Inverter reactive output (Q) % of Srated	30% supplying	0%	0%	40% sinking
Australia C	Voltage	215	230	240	255
	Inverter reactive output (Q) % of Srated	44% supplying	0%	0%	60% sinking

6.5 Smartphone app SOFAR View

The app is available for Android and iOS systems and allows for easy initial setup as well as advanced configurations.

Download link:

iOS	Android

After switching on the inverter, the app finds the unit via Bluetooth under its serial number.

The app password for the installation is 6868, for the end customer 8888.

- If the Bluetooth connection does not work, please carry out a firmware update of the inverter.

7 Operation of the device

This chapter describes the LCD and LED displays of the HYD 5K ... 20KTL-3PH inverter.

7.1 Control panel and display field

7.1.1 Buttons and display lights

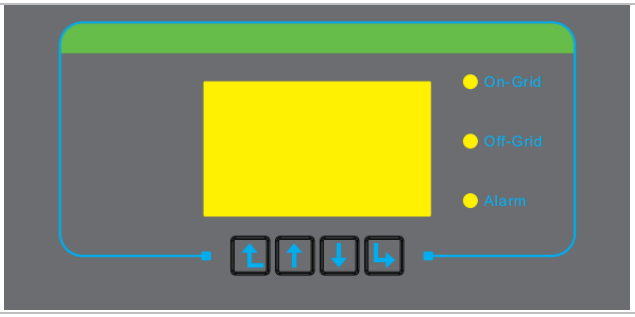

Buttons

Button	Name	Description
	Back	Previous screen, enter menu
	Up	Select previous menu item, increase setting value
	Down	Select next menu item, decrease setting value
	Enter	Enter Menu item, select next digit, confirm setting

LEDs

State	Colour	State
On-grid	Green	Normal
	Green (flashing)	Standby
Off-grid	Green	Normal
	Green (flashing)	Standby
Alarm	Red	Error

7.2 Standard display

The screen shows all relevant information of the inverter:

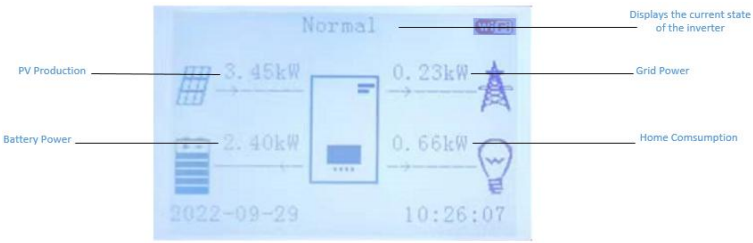

↑	Press Up button, to show PV Information like voltage, power and frequency
↑	Press Up button again to show Grid Output Information like voltage, power and frequency
↑	Press Up button again to show Grid Information such as power and IMPORT PF
↑	Press Up button again to show Load Information like Load Power
↑	Press Up button again to show Battery Information(BAT1) like current, power, state of charge etc.

↑	Press Up button again to show Battery Information(BAT2) like current, power, state of charge etc.

7.3 Energy storage modes

The HYD 5-20KTL-3PH comes with several integrated energy management modes.

7.3.1 Self-use

In the Self-use mode, the inverter will automatically charge and discharge the battery according to the following rules:

	If PV generation equals the load consumption (ΔP < 100 W), the inverter won't charge or discharge the battery
	If PV generation is larger than the load consumption, the surplus power is stored in the battery
	If the battery is full or at maximum charging power, the excess power will be exported to the grid

If the PV generation is less than the load consumption, it will discharge the battery to supply power to the load.

If PV generation plus Battery discharge power is less than the load, the inverter will import power from the grid.

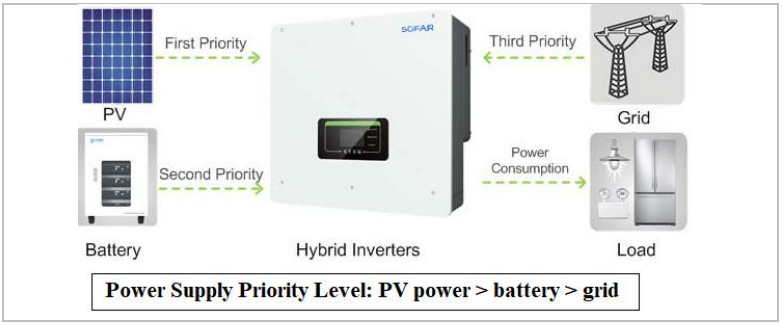

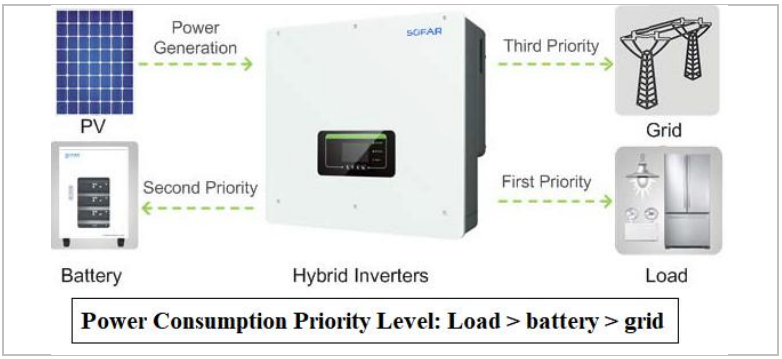

The priority of power supply: PV, Battery, Grid

The priority of power consumption: Loads, Battery, Grid

- If it is not allowed to export power to the grid, an energy meter and/or CT needs to be installed, and the "feed-in limitation" function needs to be enabled.

7.3.2 Time-of-Use

With the Time-of-Use mode, the inverter can be set to charge the battery in defined intervals of time, date or weekday, depending on the State of Charge of the battery. Up to 4 rules (rule 0, 1, 2 and 3) can be set. If more than one rule is valid for any given time, the rule with the lower number is active. Each rule can be enabled or disabled.

In below example, the battery will be charged with 1 kW, if the SOC is below 70%, between 2 and 4 o'clock at night, from 22nd Dec till 21st March:

Set Time-of-use Mode				
Rule 0:		Enabled / Disabled		
From		To	SOC	Charge
02 h 00 m	-	04 h 00 m	070%	01000W
Effective		date		
Dec.22		-	Mar.21	
Weekday		select		
Mon. Tue. Wed. Thu. Fri. Sat. Sun.				

If no rule applies, the Self-use Mode is active.

7.3.3 Timing

With the Timing Mode you can define fixed times of the day to charge or discharge the battery with a certain power.

Up to 4 rules (rule 0, 1, 2 and 3) can be set. If more than one rule is valid for any given time, the rule with the lower number is active. Each rule can be enabled or disabled, also charging and discharging period for a rule can be enabled separately.

In below example, the battery will be charged with 2 kW between 22 and 4 o'clock at night, and discharged with 2,5 kW between 14 and 16 o'clock:

Timing Mode	
Rule 0: Enabled / Disabled / Enabled charge / Enabled discharge	
Charge Start	22 h 00 m
Charge End	05 h 00 m
Charge Power	02000 W
DisCharge Start	14 h 00m
DisCharge End	16 h 00m
DisCharge Power	02500 W

7.3.4 Passive

The passive mode is used in systems with external energy management systems. The inverter's operation will be controlled by the external controller using the Modbus RTU protocol. Please contact SOFAR if you need the Modbus protocol definition for this device.

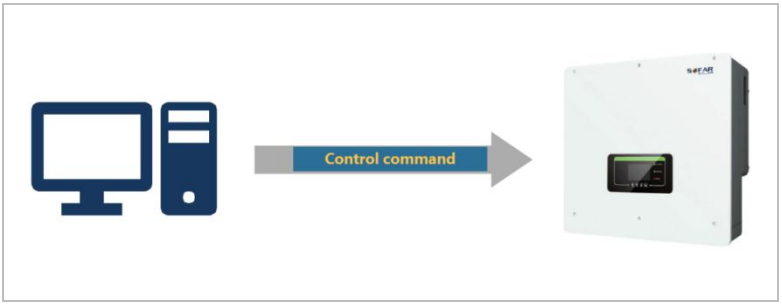

7.3.5 Peak Shaving

Used to limit the maximum power priority purchased from the grid.The maximum purchasing power can be set in this mode. When the system preferentially buys more power from the grid than the set value,The battery starts discharging and stabilizes the system power at the set value.

Application:

Peak Shaving Mode allows the grid to supply power to the load first. Applicable to the occasions where electricity price is charged according to electricity consumption and the occasions where the power grid is weak. In the weak grid situation, batteries start only when the load power exceeds a certain value, which reduces the maximum power of the connecting point and prolongs the battery life.

7.3.6 Off-grid

When the SOC of the battery is sufficient and can be discharged, it is preferred to use the battery in off-grid load mode (even if the power grid exists). After the battery enters the state of power loss, it will be transferred to the power grid or generator for load, and the battery will be charged.

1. AC Source

   Grid charge: After the battery enters the state of power loss, it is transferred to the grid to carry the load and charge the battery.

   DG charge: After the battery enters the state of power loss, it is transferred to the generator to carry the load and charge the battery.

2. AC Charge

   AC Charge: The sum of the power input to the power grid or generator after battery loss and when charging the battery.

- When AC Source is set to DG charge, the generator can be started through Genset Mode in dry contact Control.

EODO: EPS Discharge Depth

EPSbuffer: Safety Buffer

Application:

When the local power grid is unstable or generators are used.

7.3.7 Manual Genset

This mode activates manual recharging of the battery in the event of a grid failure via a power generator connected to AC GRID.

7.3.8 Feed-in Priority

In this mode, the PV system will prioritise the supply of power to the grid according to the set power after the loads have been satisfied, and will only charge the batteries when the grid supply target has been reached. Users need to pre-set the value of power they wish to deliver to the grid, and the system will intelligently allocate power accordingly.

When the PV power generation is sufficient, the system will first protect the load power consumption, and the remaining power will be prioritised to meet the set grid power demand. If the actual power generation exceeds the set value, the excess will be charged for the battery; if the power generation is less than the set value, all the remaining power will be delivered to the grid, and the battery will not be charged at this time.

When the PV power generation is insufficient, the system will be supplemented by the battery to meet the load power consumption gap. In this state, the inverter will not deliver any power to the grid, ensuring that local power demand is prioritised.

7.4 Menu structure

Press the button to bring up the main menu.

7.4.1 Main menu

1. System Settings
2. Advanced Settings
3. Energy Statistics
4. System information
5. Event list
6. Software update
7. Battery real-time Info (only with the BTS battery system)

- The menu layout may vary according to different firmware versions.

7.4.2 "System Settings" menu

In this menu you can do the basic settings which are needed to operate the device.

1. Language Settings	Sets the display language
2. Time	Sets the system time of the inverter
3. Safety Param.	Sets the country and grid code
4. Energy Storage Mode	(Battery channel is available and the inverter is not a slave.) Select between Self-use mode (Standard), time-of-use mode, timing mode, passive mode. See "Storage Modes" chapter for details.

5. Input Channel Config	With the Input Channel Configuration you define if PV and / or batteries are connected and in what configuration.
Bat Channel1	If a battery is connected to BAT1 input, select "Bat Input1", otherwise "Not Use"
Bat Channel2	If a battery is connected to BAT1 input, select "Bat Input1", otherwise "Not Use"
6. EPS Mode	Enable / Disable the emergency power supply mode (EPS). It is only available if a battery is connected
7. Communication Addr.	Enter the Modbus address (when several inverters require simultaneous monitoring), standard: 01 Baud Rate: The default baud rate is 9600

7.4.3 "Advanced Settings" menu

Password

- Several settings require a password to be entered (the standard password is 0001).

In this menu you can do advanced settings.

1. Battery Parameter	(Setting is only allowed if there is a battery channel.) Set the battery parameters for Battery 1 and Battery 2. Depending on the selected Battery Type, more settings can be adjusted. See details below.
1.1. **Battery 1**	
Battery Capacity (kWh)	Set the capacity of connected battery
Battery address	(only for batteries with integrated BMS)

	Up to 4 battery addresses for each Battery Input Channel can be set. This is the CAN bus or Modbus ID of each battery stack connected to the Battery Input, depending on the bus type between inverter and the BMS.
Nominal Battery Voltage (V)	Nominal DC voltage of the battery
Battery Cell Type	(for inverter-integrated BMS)
Max. charging current (A)	Max. allowed charging current for the battery
Max. discharging current (A)	Max. allowed discharging current for the battery
Depth of Discharge (DOD)	Max. allowed Depth of Discharge (DOD) for the battery. DOD of 80% means, a battery with 10 kWh capacity can be discharged to a minimum energy level of 2 kWh.
on_gird DOD	Max. Depth of Discharge (DOD) for grid-connected mode. Standard 80%. When setting the BTS-5K battery discharge depth, the maximum limit is 90% to prevent the battery from being too low to recharge.
off_grid DOD	Depth of Discharge (DOD) for EPS mode. Standard: 80%
EPS Safety Buffer	Standard:5%
Enable Force Charge	Enable / Disable. When the BTS-5K battery or GTX3000 battery is connected, if "Enable Forced Charge" is enabled, the inverter will forcibly charge until it is fully charged once a month according to the time set in "Set Forced Charge Time".
Set Force Charge Time	Define the time for the forced charge.
Forced recharge	When connected to a BTS-5K battery, if the SOC for a month is less than 10%, the battery will be forced to charge to 10% SOC. When the SOC < 5% and the battery changes from sleep to normal state and the PV is stable online for 3 minutes or more, the battery will be forced to charge to 5% SOC. When the GTX3000 battery is connected, if "Enable Force Charge Time" is enabled, the inverter will be

	forcibly charged once when the SOC of the battery falls below 8%. When connecting other batteries, if SOC < (1-EOD)/2, the battery will be charged to SOC >= 1-EOD. If the BMS requests a recharge, the battery will be charged to 30%-31% stop.
1.2. **Auto Configure Address**	Select "Auto configure address", you can see "Battery quantity" after entering, and you can configure the quantity by yourself.
2. Battery Active	(Only available for SOFAR battery types.)
Auto Active Control	Enable / disable. If Automatic activation is enabled, the inverter will activate the battery when the inverter need to discharge or charge the battery according to the operational mode settings. If automatic activation is disabled, the battery has to be activated manually by selection the “Force active” menu item.
Force active	Select “Force active” to activate a battery from standby mode.
3. Set Feed-in Limit	Activates or deactivates the feed-in power function of the inverter and sets the maximum feed-in power. This function must be used together with an external current transformer or the smart meter. Details regarding this can be found in the “Communications interfaces” chapter of this manual
Feed-in Limit	Disable: Do not use this function Three phase limit: the sum of all phases is regulated (balancing counting as is common in Germany). Feed-in Limit: the power of the feeding-in phases is limited.
PCC Limit Scheme Config	PCC Limit bit: The PCC Limit Scheme Config function can be enabled by configuring it. Device type: Sets whether the device type is a domestic or a non-domestic. (Domestic can be reset by “Reset flag bit”, non-domestic into the state 3

	(Low power state) cannot be reset within 4 hours.) current limit percent: Set the current limit for the current flowing to the GIRD. Lock enable bit: When the machine detects that the PCC point current exceeds the set current limit percentage and continues for a certain period of time, it will enter the low-power state. When the machine is set to the lock state, it needs to be manually reset to restore the anti-counter-current state of the machine. (The Reset function is disabled after t he Reset flag bit is used for four times.)When the machine is set to the no lock state, the CLS returns to the normal state by itself as long as the machine detects that the PCC point current is below the current limit percentage for 1 minute. Reset flag bit: Reset the flag bit. When the status query is displayed as the fault state (you need to see the English display on the LCD), you can reset the flag bit to make the status become Normal state. Lock flag bit cleared: When lock enable bit is enabled, if the device is locked and cannot be reset, you need to enter password 5170 to clear the lock flag. status query: View the current status.(State 1: Normal state; State 2: Critical state; State 3: Low power state; State 4: Fault state)
4. IV Curve Scan	(Only set with PV channel.) Cyclical scanning of the IV curve in order to find the global point of the maximum output. Advisable in the case of shaded solar generators
Scan Control	Enable / disable IV curve scan function
Scan Period	Set scan period in minutes
Force Scan	Manually start IV curve scanning
5. Logic interface	Activates or deactivates logical interfaces. Details regarding this can

	be found in the "Communications interfaces" chapter of this manual
6. Restore Factory Settings	Resets stored data in the inverter
Clear energy Data	Clears total power production
Clear Events	Clears historical events
Restore Factory Settings	Clears total power production and historical events
7. Parallel setting	Defines configuration for parallel inverter operation (Master/Slave)
Parallel Control	For inverters connected with Link port to each other, you set Parallel Control to "Enable"
Parallel Primary-Replica	One Inverter need to be set as Master (Primary), all other inverters need to be set to Slave (Replica)
Parallel Address	Set each inverter with an individual parallel address. (It is an independent number from Modbus ID)
Save	After changes, select "save" item to save the settings
8. Reset Bluetooth	Resets the Bluetooth interface of the inverter if the device is not found by the Sofar View App
9. CT Calibration	This function is used to correct the direction and grid phase assignment of the CTs directly connected to the inverter. During CT Calibration, the inverter must be connected to a battery and the grid. It is recommended to turn off the load during calibration. If calibration fails, check if the battery can be charged/discharged correctly
10. witch On / Off	The inverter can be switched on, switched off, set to standby or set to normal operating mode, which can be useful for installation or maintenance work
11. Unbalanced Support	(After version V120002 it is possible to use this function in parallel.) Default setting: disabled In situations where the customer only wants to support the local loads or has a zero-export limit across all three

	phases. When used in conjunction with the supplied three-phase energy meter and with this option set to "enable", the per phase output current of the inverter will respond independently. Important: for this function to operate properly, the phase on the energy meter must correlate to the corresponding phase when it is wired into the inverter.
12. PCC Purchase Control	PCC Buy Control: Control whether the PCC power control function is enabled. PCC Buy Power Control: Power upper limit, that is, the maximum power that can be purchased from the PCC. (When the load is greater than the maximum power purchased from the PCC, the load power priority is higher to meet the load power priority.)
13. PCC power bias	Calibration for PCC power calculation.
14. EPS GFCI	Activates RCD type B monitoring in EPS mode (300 mA)
NeutralPointGrounding	When using off-grid mode, ensure that neutral ground is enabled. For Australia, South Africa, and New Zealand, neutral ground is turned off by default, refer to 5.3 System Overview
15. Dry Contact Control	(The inverter is not allowed to set for the slave machine.)
Disable	No use this function
Generators Mode	can start and stop a generator
RelayOpenIn EPS	In EPS mode, the dry contact interface will output a 12V signal
RelayCloseIn EPS	In grid-tied mode, the dry contact interface will output a 12V signal

- The inverter (Available from hardware version V003) has built-in relays to control the short circuit of the load N line to ground when off-grid.

- When the inverter is off-grid and the load N line and PE line are short-connected, if the power grid is restored and the load N line and PE line are still short-connected, leakage protection will be triggered and explosion hazard will not be caused.

7.4.4 "Energy Statistics" menu

Today	Press Down button to move between items Shows PV, Load, Export, Import, Charge, Discharge Energy (kWh) for the selected period
Month	
Year	
Lifetime	

7.4.5 "System Information" menu

1. Inverter Info	
Inverter Info (1)	Serial number, Hardware Version, Power Level, Safety Firmware Version
Inverter Info (2)	Software Version, Country, Country Code Version
Inverter Info (3)	Bat Channel1, Bat Channel2, PV Channel1, PV Channel2
Inverter Info (4)	Energy Storage Mode, RS485 Address, EPS Mode, IV Curve Scan
Inverter Info (5)	DRM0 Control, PF Time Setting, QV Time Setting, Power Factor
Inverter Info (6)	Anti Reflux, Insulation resistance, Parallel Control, Unbalanced Support
Inverter Info (7)	Battery Active
2. Battery Info	
Bat1 Information (1)	Battery Type, Discharge Depth , EPS Safety Buffer
Bat1 Information (2)	The Start time and the End time of Force filling
Bat1 Information (3)	Battery Address

Bat2 Information (1)	Battery Type, Discharge Depth， EPS Safety Buffer
Bat2 Information (2)	The Start time and the End time of Force filling
Bat2 Information (3)	Battery Address
3. Safety Param.	
Safety Param. (1)	Over- / under-voltage protection
Safety Param. (2)	Over- / under-frequency protection
Safety Param. (3)	10 Min. overvoltage protection
4. debug Info	
bug info	DSP1 version, state1, state2, state3, state4, state5, state6

7.4.6 “Event List” menu

The event list is used to display the real time event recordings, including the total number of events and each specific ID no. and event time. The most recent events are listed at the top.

2. Event list	
Current event	Show latest event
Event History	Show event history
Fault information	001 ID04 06150825 (display of the event sequence number, event ID number and time that the event takes place)

7.4.7 “Sofatware update” menu

The user can update the software via the USB flash drive. SOFAR will provide the firmware update when it is required.

7.5 Firmware update

- If you want to do a firmware update, please upgrade with PV input or grid status, the update will fail if only the battery is connected.

1. Insert the USB stick into the computer.
2. SOFAR will send the firmware update to the user.
3. Unzip the file and copy the original file to a USB stick. Attention: The firmware update file must be in the “firmware” subfolder!
4. Press the "Back" on the main interface to enter the main menu page, and select "2.Advanced Settings - Switch On/Off -Switch Off". Make the inverter shut down safely.
5. Insert the USB flash drive into the USB interface of the inverter.
6. Go to menu item "6.Software update" on the LCD display.
7. Enter the password (the standard password is 0715) and then select "Software Upgrade (PCS)".
8. The system will then successively update the main DSP, auxiliary DSP and ARM processors. Pay attention to the displays.
9. If an error message appears, please upgrade again.If this continues many times, contact technical support for help.
10. After the update is complete, Go to menu item "Advanced Settings - Switch On/Off - Switch On" to make the inverter start up and run.
11. You can check the current software version in item "1.Inverter Info (2)" of the SystemInfo menu. Enter the password (the standard password is 0715) to see it.

8 Troubleshooting handling

8.1 Troubleshooting

This section contains information and procedures pertaining to the remedying of potential problems with the inverter.

To carry out troubleshooting, proceed as follows:

- Check the warnings, error messages or error codes displayed on the screen of the inverter.

If no error information is displayed on the screen, check whether the following requirements have been fulfilled:

- Has the inverter been set up in a clean, dry, well-ventilated area?
- Is the DC switch set to ON?
- Are the cables sufficiently dimensioned and short enough?
- Are the input connections, output connections and the wiring all in good condition?
- Are the configuration settings for the relevant installation correct?
- Are the display field and the communication cables correctly connected and undamaged?

Follow the steps below to view recorded problems: Press “Back” to enter the main menu in the normal interface. In the interface screen select "Event List", then press “OK” to enter events.

8.1.1 Shutdown procedure

If the inverter needs to be shut down for electrical inspection, please follow the following steps:

1. Press the "Back" on the main interface to enter the main menu page, and select Advanced Settings - Switch On/Off - Switch Off. Make the inverter shut down safely.

   - after using the menu setting to shut down the inverter, the inverter should be checked and reenergising, it still needs to be on the main menu page. Select advanced Settings - Switch On/Off- Switch On. start up to enable the inverter to start up and run.

2. Disconnect the AC circuit breaker connecting the inverter power grid port to the power grid.
3. Disconnect the AC breaker connecting the inverter load port to the emergency load.
4. Disconnect the PV side DC switch.
5. Turn off the battery and disconnect the DC switch between the battery and the inverter.
6. Wait for 5 minutes before checking the inverter.

8.1.2 Earth fault alarm

This inverter is compliant with IEC 62109-2 Clause 13.9 and AS/NZS 5033 for earth fault protection.

If an earth fault alarm occurs, the error is displayed on the LCD screen, the red light illuminates and the error can be found in the error history log.

When the inverter is connected to the battery system, when the battery system has ground fault/leak alarm in accordance with AS/NZS 5139, the inverter will also alarm. The alarm method is the same as above.

- In the case of devices equipped with a stick logger, the alarm information can be viewed on the monitoring portal and retrieved via the smartphone app.

8.2 Error list

8.2.1 Inverter error list

ID	Code Name	Description	Solution
001	GridOVP	The voltage of the power grid is too high	If the alarm occurs occasionally, the possible cause is that the electric grid is abnormal occasionally. Inverter will automatically return to normal operating status when the electric grid's back to normal. If the alarm occurs frequently, check whether the grid voltage/frequency is within the acceptable range. If yes, please check the AC circuit breaker and AC wiring of the inverter. If the grid voltage/frequency is NOT within the acceptable range and AC wiring is correct, but the alarm occurs repeatedly, contact technical support to change the grid over-voltage, under-voltage, over-frequency, under-frequency protection points after obtaining approval from the local electrical grid operator.
002	GridUVP	The voltage of the mains is too low	
003	GridOFP	The mains frequency is too high	
004	GridUFP	The mains frequency is too low	
005	GFCI	Charge Leakage Fault	Check for inverter and wiring.
008	IslandFault	Island protection fault	If the alarm occurs occasionally, the possible cause is that the electric grid is abnormal occasionally. Inverter will automatically return to normal operating status when the electric
009-010	GridOVPInstant1/2	Transient overvoltage of mains voltage 1/2	

ID	Code Name	Description	Solution
011	VGridLineFault	Power grid line voltage error	grid's back to normal. If the alarm occurs frequently, check whether the grid voltage/frequency is within the acceptable range. If yes, please check the AC circuit breaker and AC wiring of the inverter. If the grid voltage/frequency is NOT within the acceptable range and AC wiring is correct, but the alarm occurs repeatedly, contact technical support to change the grid over-voltage, under-voltage, over-frequency, under-frequency protection points after obtaining approval from the local electrical grid operator.
012	InvVoltFault	Inverter overvoltage	Internal faults of inverter, switch OFF inverter, wait for 5 minutes, then switch ON inverter. Check whether the problem is solved. If no, please contact technical support.
013	RefluxFault	Feed-in Limit function is faulty	
014	VGridUnbalance	unbalanced source voltage	
027	PVLowImpedance	PV- Low ground impedance	
032	N-PE fault	Neutral ground fault	
038	InvSoftStartFail	Inverter failed to output	
039	ArcShutdown Alarm	Arc shutdown protection	

ID	Code Name	Description	Solution
040	LowLightChk Fail	Low light detection failed	
041	RelayFail	Relay detection failure	
042	IsoFault	Insulation resistance is too low	Check the insulation resistance between the photovoltaic array and ground (ground), if there is a short circuit, the fault should be repaired in time.
043	PEConnectFa ult	Earth fault	Check the PE conductor for function
044	InputConfigE rror	Incorrect input mode configuration	Check the input mode (parallel/independent mode) Settings for the inverter. If not, change the input mode.
045	CTDisconnect	CT error	Check that the wiring of the current transformer is correct.
046	ReversalConn ect	The battery is connected reversedly	Check whether the battery wiring is correct.
047	ParallelFault	Master does not exist or is duplicate	Check the parallel mode settings for the inverter. Check whether the wiring is correct.
049	TempErrBat	Battery temperature error	For Inner BMS battery, make sure that the battery NTC cable is properly connected. Make sure the inverter is installed where there is no direct sunlight. Please ensure that the inverter is installed in a cool/ well-ventilated place. Ensure the inverter is installed vertically and the ambient temperature is below the inverter temperature limit.

ID	Code Name	Description	Solution
050-055	TempErrHeatSink1-6	Temperature error heat sink 1-6	For Inner BMS battery, make sure that the battery NTC cable is properly connected. Make sure the inverter is installed where there is no direct sunlight. Please ensure that the inverter is installed in a cool/ well-ventilated place. Ensure the inverter is installed vertically and the ambient temperature is below the inverter temperature limit.
057-058	TempErrEnv1/2	Temperature error ambient temperature 1/2	
059-061	TempErrInv1-3	Module 1-3 Temperature protection	
065	BusRmsUnbalance	Asymmetrical bus voltage RMS	Internal error of the inverter. Switch off the inverter, wait 5 minutes and then switch the unit on again. If the error persists, contact technical support.
066	BusInstUnbalance	The transient value of the bus voltage is unbalanced	
067	BusUVP	The DC bus voltage is too low during mains connection	
068	BusZVP	The DC bus voltage is too low	

ID	Code Name	Description	Solution
069	PVOVP	The PV input voltage is too high	Check whether the PV series voltage (Voc) is higher than the maximum input voltage of the inverter. If this is the case, adjust the number of PV modules in series. After the correction, the inverter automatically returns to its normal state.
070	BatOVP	Battery overvoltage	Check whether the voltage of the battery is higher than the maximum input voltage of the inverter. If this is the case, adjust the number of battery modules in series.
071	LLCBusOVP	LLC Bus overvoltage protection	Internal error of the inverter. Switch off the inverter, wait 5 minutes and then switch the unit on again. If the error persists, contact technical support.
072	SwBusRmsOVP	Inverter bus voltage RMS Software overvoltage	
073	SwBusIOVP	Inverter bus voltage instantaneous Software overvoltage	
081	SwBatOCP	Software overcurrent protection of the battery	
082	DciOCP	Dci overcurrent protection	Internal error of the inverter. Switch off the inverter, wait 5 minutes and then switch the unit on again. If the error persists, contact technical support.

ID	Code Name	Description	Solution
083	SwIOCP	Instantaneous output current protection	
084	SwBuckBoost OCP	BuckBoost software sequence	
085	SwAcRmsOC P	Output RMS current protection	
086	SwPvOCPInst ant	PV overcurrent software protection	
087	IpvUnbalance	PV flows in uneven parallelism	
088	IacUnbalance	Unbalanced output current	
089	SwPvOCP	PV software overcurrent protection	
090	IbalanceOCP	Balanced current protection	
091	ResOver	Resonance protection	
092	SwAcCBCFau lt	Software current limiting protection by wave	
093	SwPvBranch OCP	PV branch software overcurrent (enabled by default)	

ID	Code Name	Description	Solution
097	HwLLCBusOVP	LLC bus hardware overvoltage	
098	HwBusOVP	Inverter bus hardware overvoltage	
099	HwBuckBoostOCP	BuckBoost hardware overflows	
100	HwBatOCP	Battery hardware overflow	
102	HwPVOCP	PV hardware overflows	
103	HwACOCP	Mains current is too high and has triggered hardware protection	
105	MeterCommFault	Communication fault with meter unit	Check communication to meter.
110-112	Overload1-3	Overload protection 1-3	Please check whether the inverter is operating under overload.
113	OverTempDerating	The inverter has throttled due to too high a temperature	Make sure that the inverter has been installed in a cool and well-ventilated place without direct sunlight. Make sure the inverter is installed vertically and the ambient temperature is below the temperature limit of the inverter.
114	FreqDerating	AC frequency is too high	Make sure that the mains frequency and voltage are within the permissible range.

ID	Code Name	Description	Solution
116	VoltDerating	AC voltage is too high	
121	SpdFail(DC)	Lightning Protection Failure (DC)	Internal error of the inverter. Switch off the inverter, wait 5 minutes and then switch the unit on again. If the error persists, contact technical support.
122	SpdFail(AC)	Lightning Protection failure (AC)	
124	BatDchgProhibit	The battery is low	Please check if the battery voltage of the inverter is too low.
125	BatLowVoltShut	No battery protection	
129	PermHwAcOCP	Mains current is too high and has caused an unrecoverable hardware fault	Internal error of the inverter. Switch off the inverter, wait 5 minutes and then switch the unit on again. If the error persists, contact technical support.
130	PermBusOVP	Bus voltage is too high and has caused a non-recoverable fault	
131	PermHwBusOVP	Permanent bus hardware failure due to overvoltage	
133	PermEPSBatOCP	Permanent battery overcurrent error in EPS mode	

ID	Code Name	Description	Solution
134	PermAcOCPInstant	Permanent error due to transient overcurrent	
135	PermIacUnbalance	Permanent unbalanced output current error	
136	PermInvStartFail	The soft startup of the inverter fails	
137	PermInCfgError	Permanent input mode configuration error	Check the MPPT input mode setting (parallel mode/independent mode) of the inverter and correct it if necessary.
138	PermDCOCPInstant	Permanent input overcurrent error	Internal error of the inverter. Switch off the inverter, wait 5 minutes and then switch the unit back on. If the error persists, contact technical support.
139	PermHwDCOCP	Permanent input hardware overcurrent error	
140	PermRelayFail	Permanent error of the mains relay	
141	PermBusUnbalance	The bus voltage is unbalanced and has caused an unrecoverable error	
142	PermSpdFail(DC)	surge protection	Check if the weather is normal. Switch off the inverter, wait 5 minutes and then switch the unit back on. If the error persists, contact technical support.

ID	Code Name	Description	Solution
143	PermSpdFail(AC)	surge protection	
152	SafetyVerFault	The safety version is inconsistent with the internal safety version	Check whether safety regulations comply with local standards and import correct safety parameters.
153	SCILose(DC)	SCI communication error (DC)	Upgrade software
154	SCILose(AC)	SCI communication error (AC)	Upgrade software
156	SoftVerError	Inconsistent software versions	Download the latest firmware from the website and launch the software update. If the error persists, contact technical support.
157-160	BMS1-4CommFault	Lithium battery 1-4 communication error	Make sure your battery is compatible with the inverter. CAN communication is recommended. Check the communication line or the connection of the battery and the inverter for errors.
162	RemoteShutdown	Remote shutdown	The inverter is shut down remotely.
163	Drms0Shutdown	DRM 0 shutdown	The inverter is running with a Drms0 shutdown.
169-175	FanFault1-7	Fan 1-7 fault	Check if the corresponding fan of the inverter is running normally.
177	BMS OVP	BMS overvoltage alarm	Internal error in the connected lithium battery. Switch off the

ID	Code Name	Description	Solution
178	BMS UVP	BMS Undervoltage alarm	inverter and the lithium battery, wait 5 minutes and then switch the components on again. If the error persists, contact technical support.
179	BMS OTP	BMS High temperature warning	
180	BMS UTP	BMS low temperature warning	
181	BMS OCP	BMS overload warning during charging and discharging	
182	BMS Short	BMS Short circuit alarm	Please contact technical support.
186	BatDischarge HTP	Battery overtemperature protection	Check the ambient temperature and the battery temperature on the LCD. Switch off the inverter, wait 5 minutes and then switch the unit back on. If the error persists, contact technical support.
187	BatDischarge LTP	Low temperature protection for battery discharge	
188	BatChargeHTP	Battery charging overtemperature protection	

ID	Code Name	Description	Solution
189	AFCICommLose	The arc device communication is faulty	Internal error in the connected lithium battery. Switch off the inverter and the lithium battery, wait 5 minutes and then switch the components on again. If the error persists, contact technical support.
190	BatChargeLTP	Low temperature protection for battery charging	Check the ambient temperature and the battery temperature on the LCD. Switch off the inverter, wait 5 minutes and then switch the unit back on. If the error persists, contact technical support.
401-402	AFCI0/1	Arc pulling fault	Internal error in the connected lithium battery. Switch off the inverter and the lithium battery, wait 5 minutes and then switch the components on again. If the error persists, contact technical support.

8.2.2 Battery error list

ID	Name	Description	Solution
808	HS1HighTempWarning	Radiator 1 high temperature alarm	Check whether the number of batteries is set correctly. If the setting is correct, please contact technical support to upgrade software.
809	EnvHighTempWarning	Ambient high temperature alarm	Please make sure the battery is installed in a cool well-ventilated place. If The battery is installed correctly,

ID	Name	Description	Solution
813	StopChgWarning	Charging prohibition alarm	If the battery is almost fully, no action is required. Otherwise, please contact technical support.
814	StopDchgWarning	Discharging prohibition alarm	If the battery is almost empty, no action is required. Otherwise, please contact technical support.
864	HS1OverTempFault	Over temperature protection of radiator 1	Power off and wait for 2 hours. If the problem is not solved, please contact technical support.
865	OverTempFault_Env	Over temperature protection of ambient temperature	
866	SciCommFault	Internal communication failure of battery	If this fault occurs occasionally, wait a few minutes to see whether the problem is solved. If this fault occurs frequently, please contact technical support.
867	Can1CommFault	Can1 communication failure	If this fault occurs occasionally, wait a few minutes to see whether the problem is solved. If this fault occurs frequently, please contact technical support.
872	SwBusInstantOVP	Bus software overvoltage	If this fault occurs occasionally, wait a few minutes to see whether the problem is solved. If this fault occurs frequently, please contact technical support.
873	SwBusInstantUVP	Bus software undervoltage	
874	SwBatInstantOVP	Battery software overvoltage	
875	SwBatInstantUVP	Battery software undervoltage	
876	SwBatInstantOCP	Battery software overcurrent	

ID	Name	Description	Solution
879	HwOCP	Hardware overcurrent	
880	unrecoverBusAvgOV	Permanent bus overvoltage	Restart the battery and wait for minutes. If the problem is not resolved, please contact technical support.
881	unrecoverBatAvgUV	Permanent battery undervoltage	
882	unrecoverOCPInstant	Permanent Instant overcurrent	
883	unrecoverHwOCP	Permanent hardware overcurrent	
893	unrecoverBusSCP	Permanent short-circuit protection	Restart the battery and wait for minutes. If the problem is not resolved, please contact technical support.
894	unrecoverBatActFail	Permanent battery activation failed	
895	unrecoverBusRPP	Permanent bus reverse connection	Check whether the wiring is correct and restart the battery. If the problem is not resolved, please contact technical support.
899	BMSOVOCP	BMS overvoltage and overcurrent fault	If this fault occurs occasionally, wait a few minutes to see whether the problem is solved. If this fault occurs frequently, please contact technical support.
900	SwBatAvgOCP	Battery average overcurrent protection	
901	SwAvgOverloadP	Average overload protection	
902	SwBusInstantOCP	Bus software overcurrent	

ID	Name	Description	Solution
903	SwCBCOCP	Software CBC overcurrent protection	
905	BusSCP	Start up short circuit protection	Restart the battery and wait for minutes, Check if the power line is short circuited ,If the problem is not resolved, please contact technical support.
906	SwBusAvg UVP	Bus average undervoltage	Restart the battery and wait for minutes. If the problem is not resolved, please contact technical support.

8.3 Maintenance

Inverters do not generally require daily or routine maintenance. Before carrying out cleaning, ensure that the DC switch and AC circuit breaker between the inverter and power grid have been switched off. Wait at least 5 minutes before carrying out cleaning.

8.3.1 Cleaning the inverter

Clean the inverter using an air blower and a dry, soft cloth or a soft bristle brush. Do NOT clean the inverter with water, corrosive chemicals, cleaning agents etc.

8.3.2 Cleaning the heat sink

In order to help guarantee correct long-term operation of the inverter, make sure that there is sufficient space for ventilation around the heat sink. Check the heat sink for blockages (dust, snow etc.) and remove them if present. Please clean the heat sink using an air blower and a dry, soft cloth or a soft bristle brush. Do NOT clean the heat sink with water, corrosive chemicals, cleaning agents etc.

9 Technical Data

Model	HYD 5KTL-3PH	HYD 6KTL-3PH	HYD 8KTL-3PH	HYD 10KTL-3PH	HYD 10KTL-3PH-A	HYD 15KTL-3PH	HYD 20KTL-3PH
DC input (PV)							
Recommended Max. PV input power	7500Wp (6000Wp/6000Wp)	9000Wp (6600Wp/6600Wp)	12000Wp (6600Wp/6600Wp)	15000Wp (7500Wp/7500Wp)	15000Wp (7500Wp/7500Wp)	22500Wp (11250Wp/11250Wp)	30000Wp (15000Wp/15000Wp)
Max. input voltage	1000V						
Start-up voltage	200V						
Rated input voltage	600V						
MPPT operating voltage range	180V~960V						
Number of MPPT	2						
Max inverter back feed current to array	0A						
Max. number of input strings per MPPT	1/1			2/2			
Max. input current per MPPT	12.5A/12.5A			25A/25A			
Max. short-circuit current per MPPT	15A/15A			30A/30A			
AC output (on grid)							
Rated output power	5000W	6000W	8000W	10000W	10000W	15000W	20000W
Rated output current	7.2A	8.7A	11.6A	14.5A	14.5A	21.7A	29.0A
Rated grid voltage	3/N/PE, 230/400Vac						
Rated grid frequency	50/60Hz						
Max. output apparent power	5500 VA	6600 VA	8800 VA	11000 VA	10000 VA	16500 VA	22000 VA
Max. current output to grid	8A	10A	13A	16A	16A	24A	32A
Max. AC current from grid	15A	17A	24A	29A	29A	44A	58A
Output inrush current	100A/1μs						
Output fault current	80A/5μs						
Output overcurrent protection (RMS)	10A	12A	15A	18A	18A	26A	34A

Model	HYD 5KTL-3PH	HYD 6KTL-3PH	HYD 8KTL-3PH	HYD 10KTL -3PH	HYD 10KTL -3PH-A	HYD 15KTL -3PH	HYD 20KTL-3PH
Output overcurrent protection (MAX)	20.4A	22.5A	33.1A	40.7A	40.7A	61.1A	81.5A
THDi	<3%						
Power factor	1 default (+/-0.8 adjustable)						
Battery Parameters							
Battery type	Lithium-ion & Lead-acid						
Battery voltage range	180V~800V						
Number of battery input channels	1	1	1	2	2	2	2
Max.charge/ discharge power	5000W	6000W	8000W	10000W	10000W	15000W	20000 W
Max.charge/ discharge current	25A	25A	25A	50A (25A/25 A)	50A (25A/25 A)	50A (25A/25 A)	50A (25A/25 A)
BMS communication mode	CAN，RS485						
AC output (off grid)							
Rated output power	5000W	6000W	8000W	10000W	10000W	15000W	20000 W
Rated output current	7.2A	8.7A	11.6A	14.5A	14.5A	21.7A	29.0A
Rated output voltage	3/N/PE, 230/400Vac						
Rated output frequency	50/60Hz						
Max. output apparent power	5500VA	6600VA	8800VA	11000VA	10000VA	16500VA	22000VA
Peak output apparent power, time	10000VA, 60s	12000VA, 60s	16000VA, 60s	20000VA, 60s	20000VA, 60s	22000VA, 60s	22000VA, 60s
Max. output current	8A	10A	13A	16A	16A	24A	32A
THDv(@ linear load)	<3%						
Switching time	<10ms						
Efficiency							
Max. MPPT efficiency	99.9%						
Max. efficiency	98%			98.2%			
European efficiency	97.5%			97.7%			

Model	HYD 5KTL-3PH	HYD 6KTL-3PH	HYD 8KTL-3PH	HYD 10KTL-3PH	HYD 10KTL-3PH-A	HYD 15KTL-3PH	HYD 20KTL-3PH
Max. efficiency of charging/discharging [1]	97.6%			97.8%			
Protection							
DC switch	Yes						
PV reverse connection protection	Yes						
Battery reverse connection protection	Yes						
Output short circuit protection	Yes						
Output overcurrent protection	Yes						
Output overvoltage protection	Yes						
Insulation impedance detection	Yes						
Residual current detection	Yes						
Anti-island protection	Yes						
Surge protection	PV:Tyep Ⅱ, AC:Type Ⅱ						
General Parameters							
Operating temperature range	-30℃~60℃						
Relative humidity range	5%~95%						
Max. operating altitude	<4000m						
Standby self-consumption [2]	<20W						
Topology	Transformerless						
Installation method	Wall Mounted						
Max. number of parallel units [3]	6 pcs						
Degree of protection	IP65						
Dimensions (W*H*D)	586.6*515*261.2mm						
Cooling mode	Natural			Forced airflow			

Model	HYD 5KTL-3PH	HYD 6KTL-3PH	HYD 8KTL-3PH	HYD 10KTL -3PH	HYD 10KTL -3PH-A	HYD 15KTL -3PH	HYD 20KTL-3PH
Weight	33kg			37kg			
Communication	RS485/CAN/WiFi, Optional:Ethernet/4G						
Display	LCD & Bluetooth+APP						
Standard	EN61000-1, EN61000-2, EN61000-3, EN61000-4, EN61000-4-16, EN61000-4-18, EN61000-4-29, IEC62109-1, IEC62109-2, NB-T32004/IEC62040-1, AS/NZS 4777, VDE V 0124-100, V0126-1-1, VDE-AR-N 4105, CEI 0-21/CEI 0-16, C10/11, EN50438/EN50549, G83/G59/G98/G99, UTE C15-712-1, UNE206 007-1						

[1] Battery-AC maximum efficiency of battery charge and discharge
[2] Standby loss at rated input voltage
[3] Maximum number of parallel machines of the same model

ENERGY TO POWER YOUR LIFE

ADDRESS

11th Floor, Gaoxingqi Technology Building,
District 67, Xingdong Community, Xin'an Street,
Bao'an District, Shenzhen, China

EMAIL

info@sofarsolar.com

WEBSITE

www.sofarsolar.com

SOFARSOLAR

102040200167-2